Automatic Tub System

Advanced solutions for salt & curing process

TRAUST TECHNOLOGIES



- Automatically changes tubs
- Economical system
- Fast & easy production process
- Safe & easy to operate

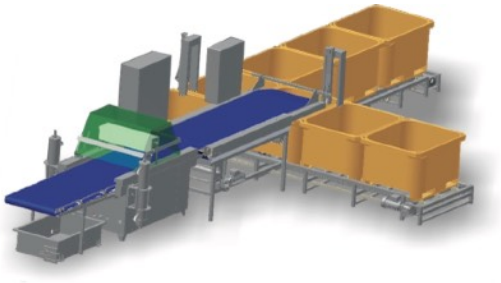

High Quality Auto Tub Changing System

Advanced flexible module system.
We custom build each system to customer specification

Automatic tub changing system is used to move the tubs after the Easy Layer has laid the product into the tub, after the TR 850 injecting machine has injected the product with brine.

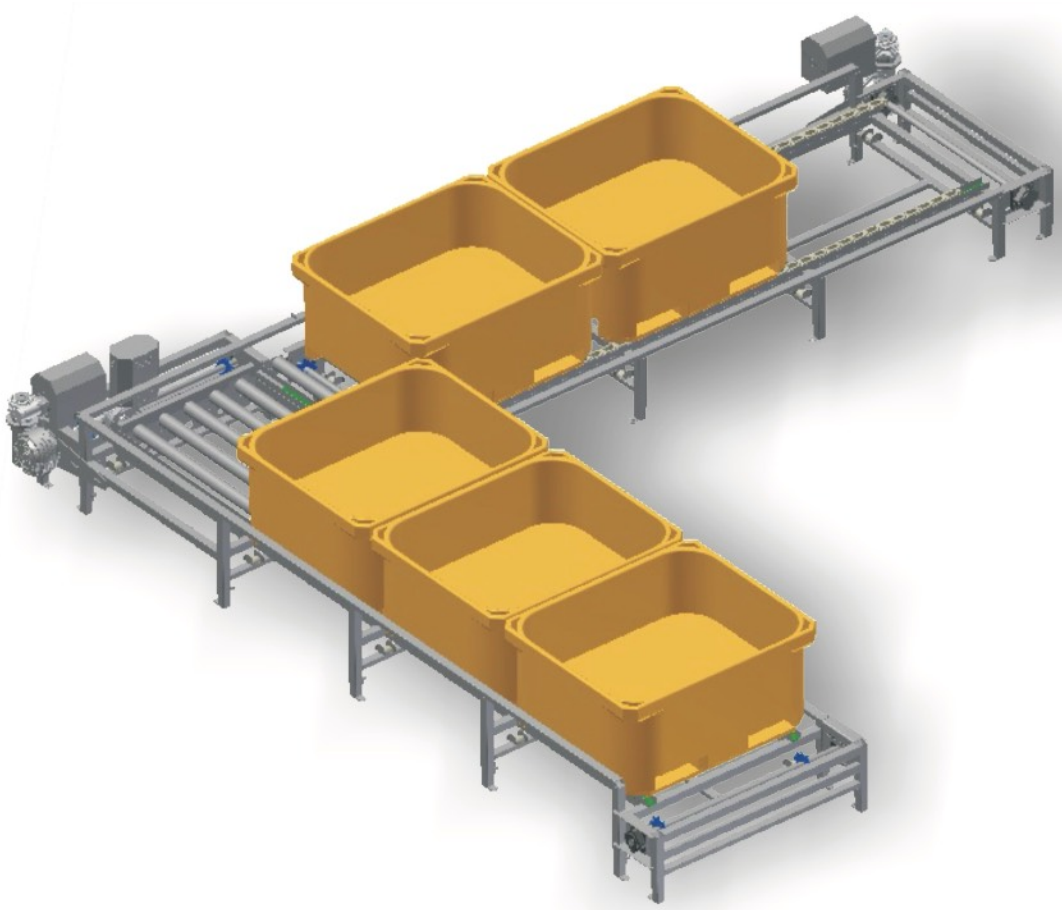

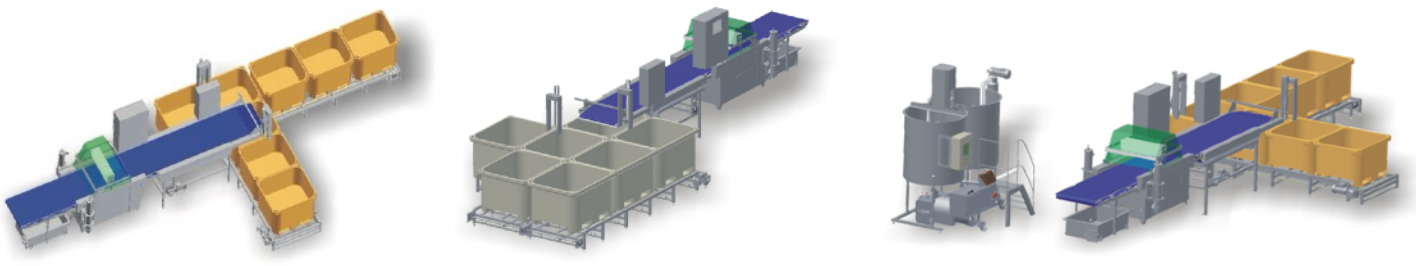

TR 850 Injection machine with Easy Layer and Automatic Tub System

Advanced Automatic Tub System

Reliable system used to move tubs from Easy Layer.
It treats the product gently & reduces risk of contamination

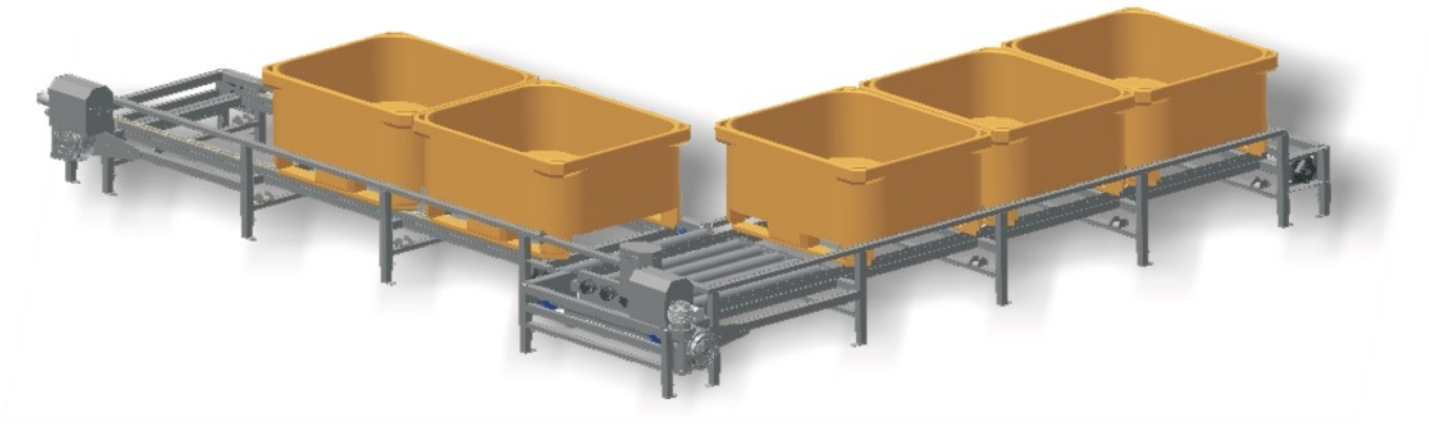



Automatic Tub System, Easy Layer & TR 850

Benefits:

- Automatically changes tubs
- Rugged Stainless steel unit
- Complete solution
- Automatic process
- Scalable capacity
- Huge labor saving
- Energy efficient
- Reliable system
- Flexible processing modules
- Easy to clean & sanitize

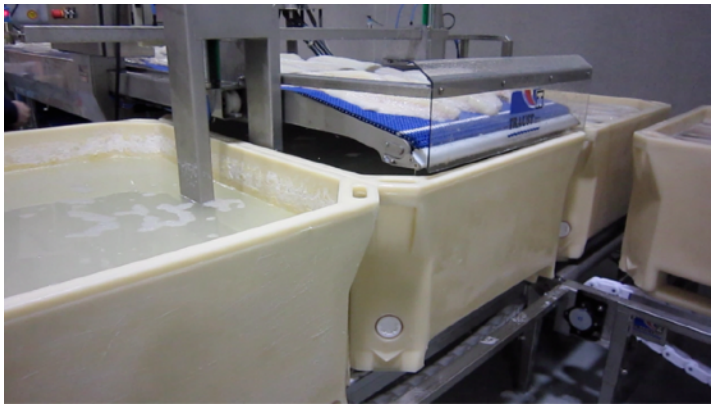

Easy Layer is about to lay the fish fillets into the tub that sits on a Automatic tub system witch moves the tub when it is full for further processing.



You can see the Easy Layer laying the fish fillets gently into the tub.

Automatic Tub System

When producing salted fish or meat:

The TR 850 Injecting machine injects the product with salted brine. Then Easy Layer lays the product into the tub. The Automatic tub system is used to change the tub after it is full and replaces it with new empty tub.

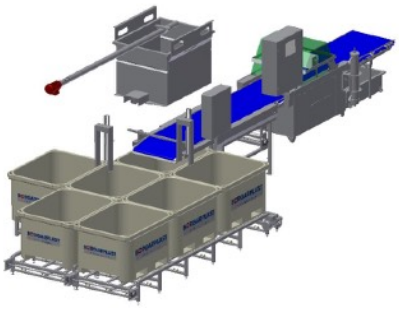

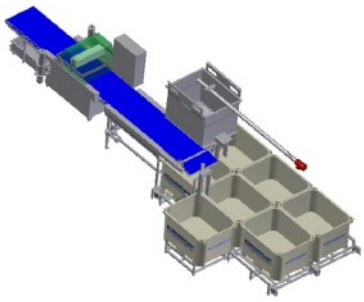

Fomaco Injector with Easy-Layer & Automatic tub changing system

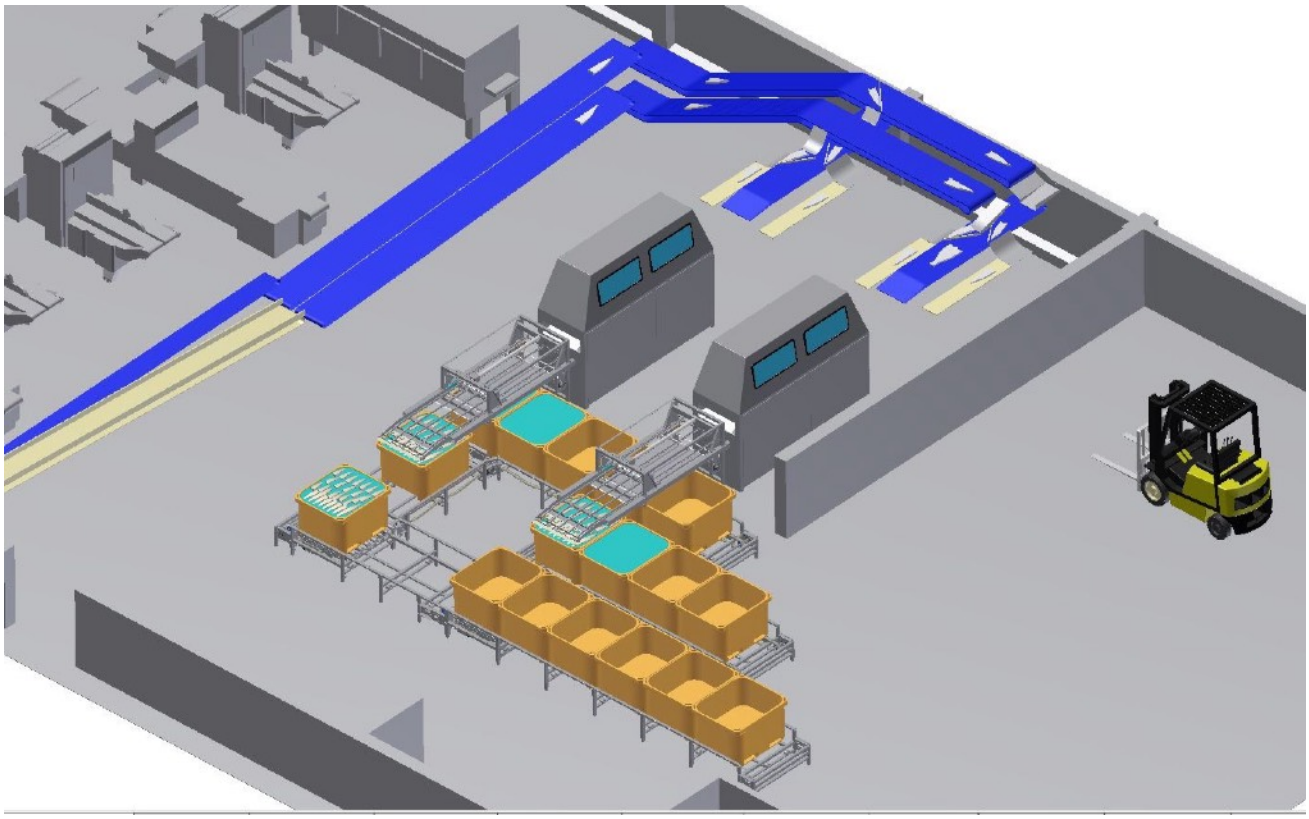

Automatic tub changing system

Optimize your investment with custom-made solutions
Traust Know How, Ltd., has been a leader developing processing equipment for over 30 years. Our qualified team of engineers with years of experience design and develop all our processing plants/ equipment to suit the needs of processing industries around the world.