Easy Compact Grader

Simple & Quick grading for food products

TRAUST TECHNOLOGIES

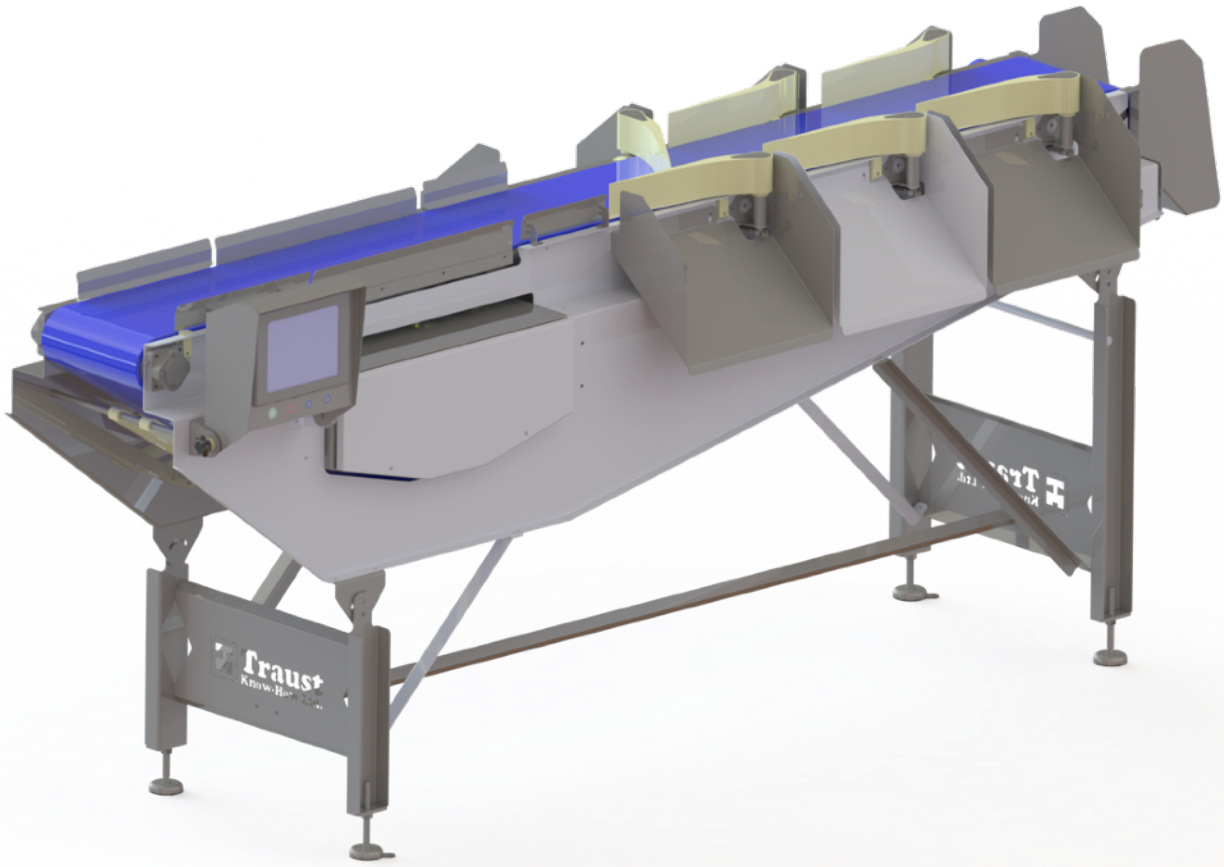

- Easy automatic operation
- Fast & accurate grading
- Simple batching
- Easy installation
- Safe & easy to operate



Advanced Compact Grading

Gentle sorting and batching for any food product

Capable of grading and batching 6+1 different weight categories.

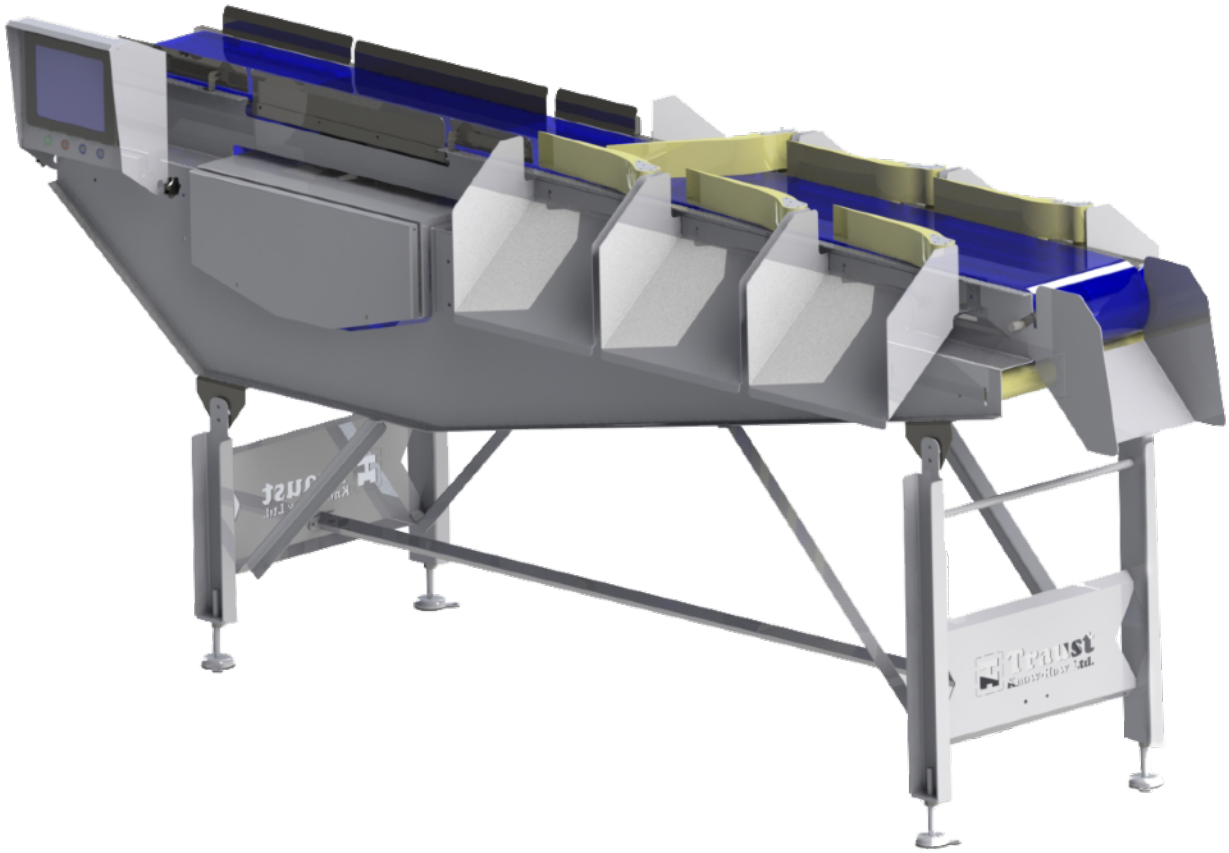

The Easy Compact Grader is robust with a user-friendly touch screen and Ethernet connection for data logging. The highly economical Easy Compact Grader is a part of a line of low-cost advanced processing equipment that offers essential high-tech machine. Suitable for simple grading and batching of a wide variety of products, the grader is designed to fulfill the needs of small and medium sized companies. The Easy Compact Grader is ideal as an add-on for larger companies requiring a machine that can handle temporary or seasonal overflow needs that do not

---

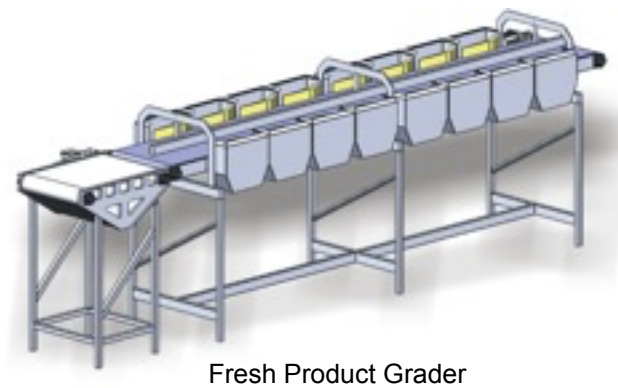

Fresh Product Grader



Salt Fish Grader

Easy Grading & Batching

Fast precision grading, handles raw material gently

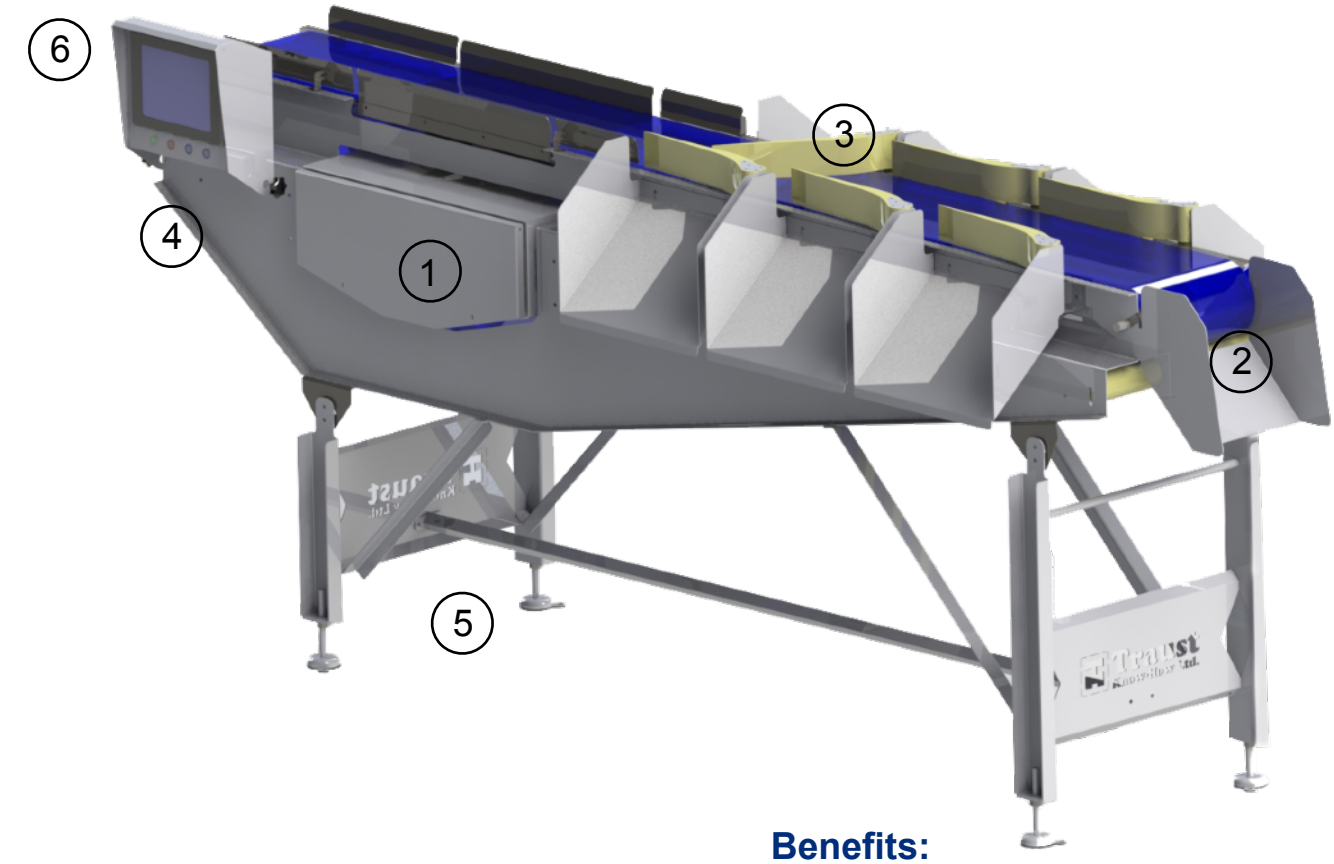

1) Flowscale
2) Conveyor
3) 6 pcs. Grading gates
4) Conveyor motor
5) Adjustable legs
6) Touch screen

Benefits:

- Fast precision grading
- Automatic process
- User friendly interface, touch screen
- Ethernet connection
- Handles raw material gently
- High capacity grading
- Energy efficient
- Standard solution
- Easy to clean & sanitize
- Safe & easy to operate

Operating the Easy Compact Grader ECG100

The Easy Compact Grader, ECG100, grades and batches product pieces into a maximum of 6 different categories. The arms above each gate quickly select each individual piece into the gate. When pre-determined batch has been reached, a light turns on under the gate. The operator then removes the batch and presses a button under the gate to open it again for the next batch. All data can be exported to a database with Ethernet connection.

Easy Compact Grader

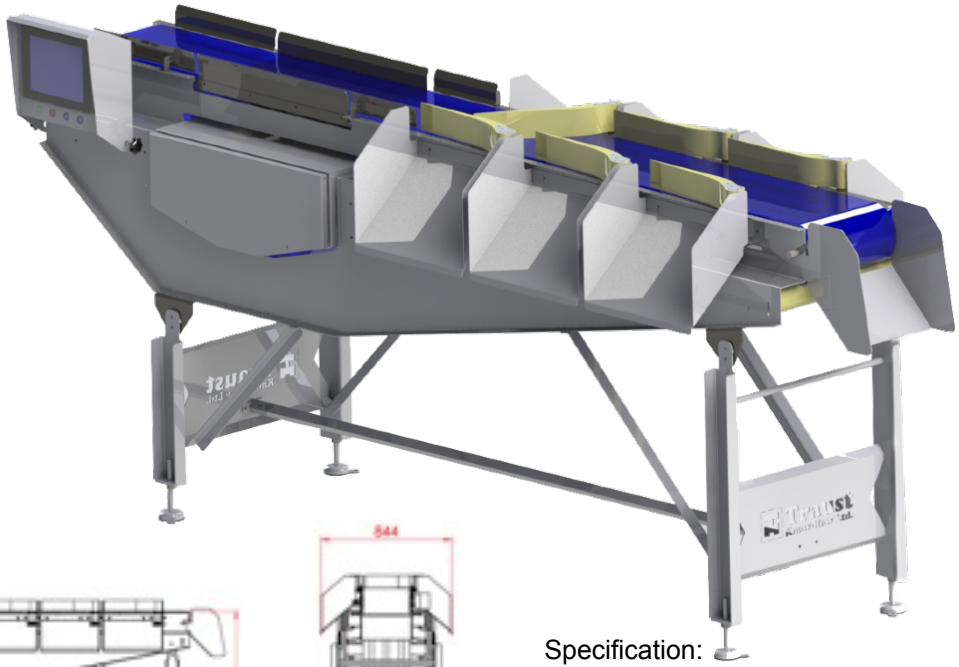

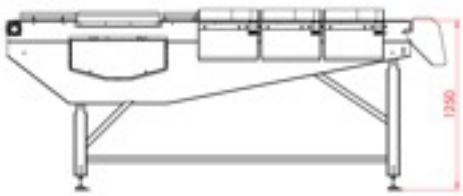

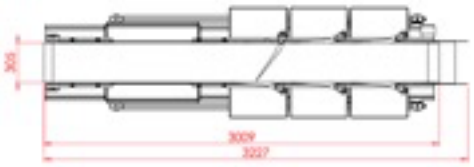

Specification:
Dimensions L x W x H: 1250 x 844 x 3227mm
Number of gates: 6
Accuracy: 2g for pieces under 500g, otherwise 5g
Capacity: 120pcs/min
Product length: 50mm - 450mm
Gate division: 460mm
Display: Touch screen
Power: 700W
Voltage: 1x208-230 V
Frequency: 50/60Hz.
Current: 3amp.
Air required: Working pressure: 6bar. 120L/min.
Weight: 205kg.

Available is a wide range of graders, to grade most food products

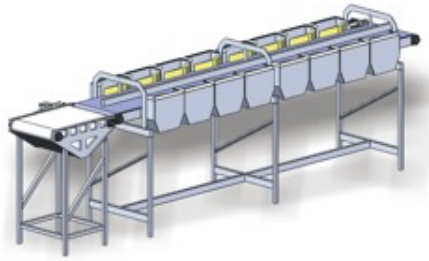

Fresh Product Grader

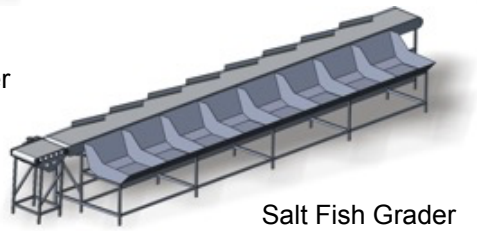

Salt Fish Grader



Pelagic
Channel Grader



Scallop
Channel Grader

Optimize your investment with custom-made solutions
Traust Know How, Ltd., has been a leader developing processing equipment for over 30 years. Our qualified team of engineers with years of experience design and develop all our processing plants/ equipment to suit the needs of processing industries around the world.

www.traust.is traust@traust.is Office phone: +354-516-3000

TRAUST TECHNOLOGIES