# Easy Defrosting Tank

## Advanced thawing solution



- Frozen block separator
- Faster defrosting
- Gentle handling of the raw material
- Higher yield than traditional methods
- Water thawing process



# High Quality Defrosting

## Advanced water thawing process

Available is an extensive range of defrosting solutions, built to customer needs. Years of experience, our solutions are state of the art.

By using the **IDS defrosting tank** the yield increases compared to other traditional defrosting where circulation of water with air is used. But all this is related to the raw material and its handling from the catching to defrosting.
The aim with the development of IDS is to insure more gentle handling of the fish, get less gaping in the processed fillet after defrosting in the IDS machine and reduce protein loss resulting in better yield.
It has been proven that by letting the fish stand in cooled seawater or salted water after defrosting in IDS you get even better yield and we have seen 3-5% compared to traditional methods like other competitors if you are familiar with those.
Also it have been noticed that more of the product have been seen to be placed in higher quality grade as the fish is more firm after filleting in machines or manually.

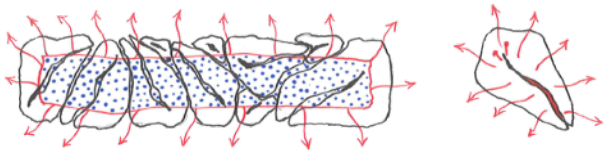

**It is obvious that the yield has very much to say in your economy, to use IDS we are talking about 3-5% more packing yield compared to older methods of defrosting!**

### The Easy Defrosting System:

The system include scissor lift table for elevating the pallet with the frozen block, unwrapping table, mechanical block separator, delivery conveyor to the defrosting tank and receiving bulk feeder. Water circulating thawing process for various products such as cod, haddock, saith, shellfish, pelagic fish etc.

The thawing process is done in batches depending on the size of the tank. A powerful pump circulates the thawing water through heat exchanger to reach effective and short thawing time. PLS system controls the whole process from the beginning when the first fish block enters the thawing machine until the fish is fully thawed and discharged by conveyor. Multiply tanks system gives continuous flow in production controlled by the PLS.

The thawing machine can be loaded by special conveyor or semi manual by special lifting and loading platform. Equipped with heat exchanger/electrical tube and control box with touch screen.







# Advanced Tank & Spiral Defrosting

## Water circulating thawing process for various products such as Cod, Haddock, Seith & pelagic fish etc.

Thawing frozen fish to safe temperature for further processing

1



2



3



4



1) Scissor table for unwrapping
2) Separator
3) Tank
4) Touch screen

**Benefits:**

- Defrosting fish & more
- Fast thawing process
- Multi purpose defrosting system
- User-friendly touch screen
- Easy adjustable settings
- Internet connection
- Many different sizes
- Material: Stainless Steel
- Easy to maintain
- Easy to clean & sanitize
- Built to customer specification

# Easy Defrosting Tank

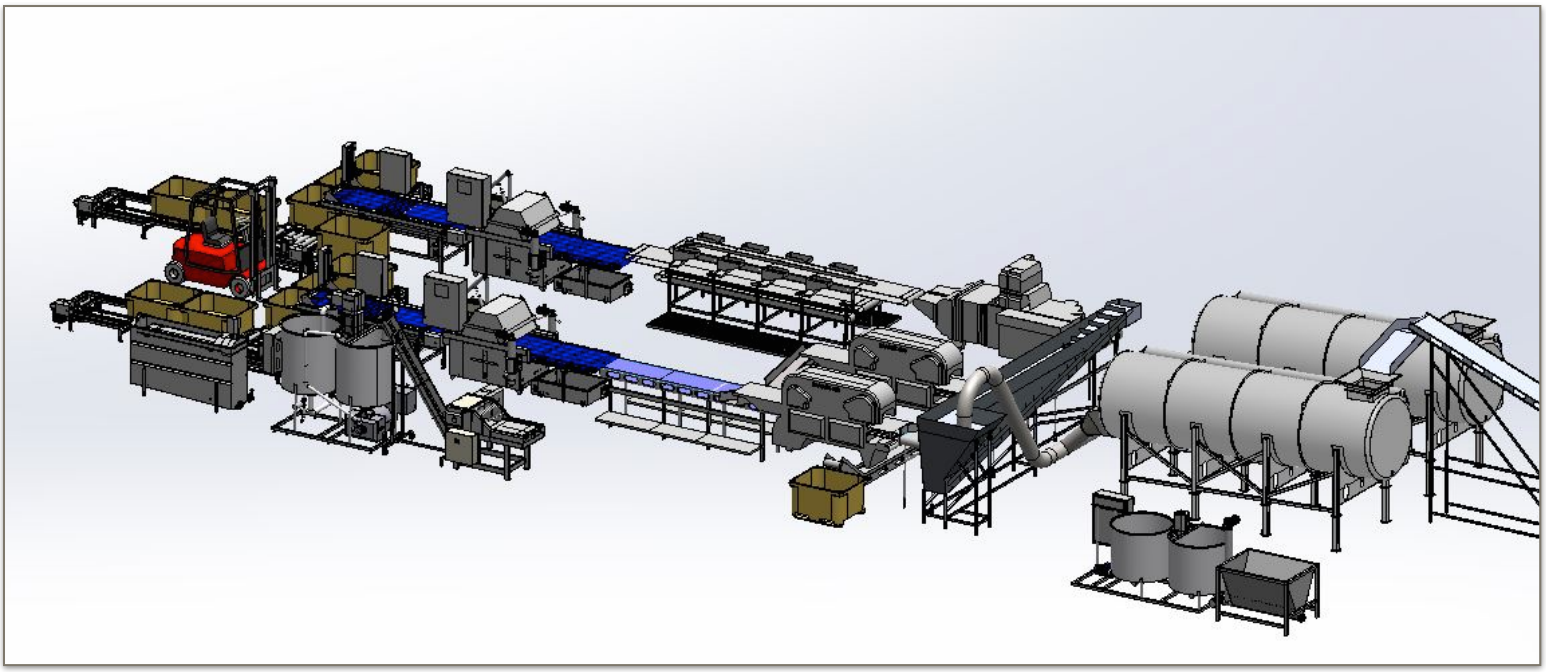

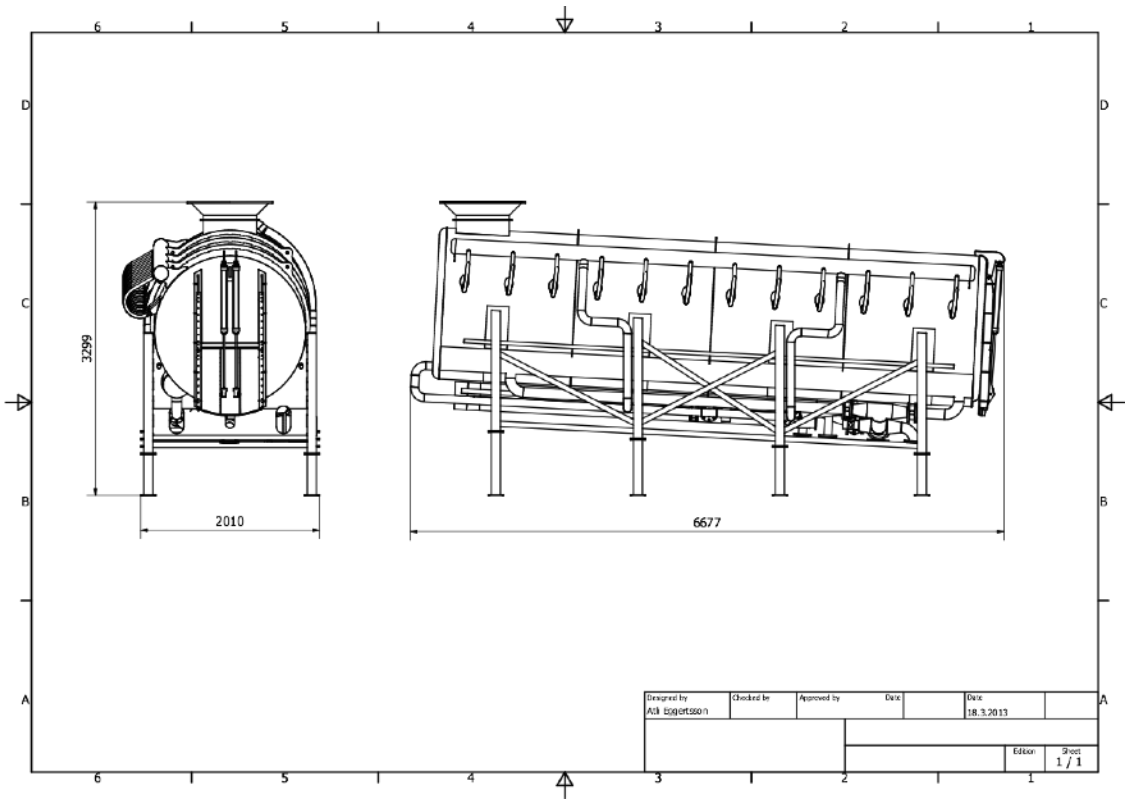


**Optimize your investment with custom-made solutions**
Traust Technologies, Ltd., has been a leader developing processing equipment for over 30 years. Our qualified team of engineers with years of experience design and develop all our processing plants/ equipment to suit the needs of processing industries around the world.