Easy Glazing & Cooling System

Advanced glazing & cooling solutions

TRAUST TECHNOLOGIES







- Rugged glazing & cooling machines
- Flexible system
- Fast & easy production process
- Easy to clean & sanitize
- Small footprint

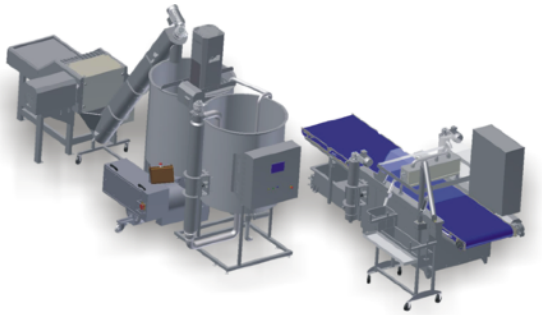

Easy Layer, Easy-Inject system
& TR-850 Injector injecting
“Fish in Fish” or “Meat in Meat”

High Quality Glazing

Advanced glazing process both dipping and spraying. The Easy Glazing System handles raw material gently

Available is an extensive range of glazing machines, built to customer needs. Years of experience, our solutions are state of the art.







Benefits:

- Glazing fish & meat while processing
- Rugged Stainless steel unit
- Multi purpose glazing system
- Easy adjustable settings
- Many different sizes
- Energy efficient
- Reliable system
- Easy to clean & sanitize
- Built to customer specifications

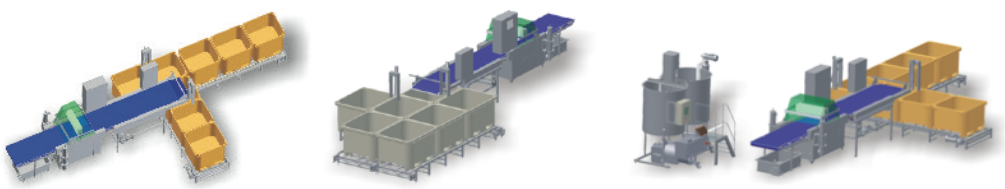

TR 850 Injection machine, Easy Inject with Easy Layer and Automatic Tub System

Advanced Cooling System

Chills fish, meat, protein & other food products while they are being processed

Chilling & cooling to safe processing temperature

1



2

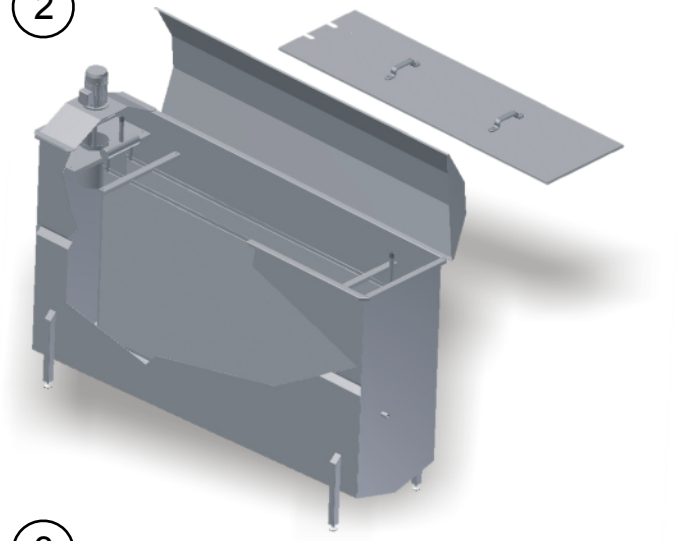

3

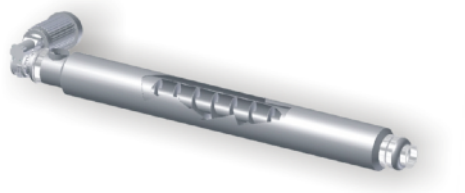

Easy chilling tower (Cryolator) vertical swept surface heat exchanger, offers the ultimate in the liquid process.

4



Easy Cooler.
To chill fish fillets, meat & other food product that needs liquid chilling, while being processed.

1) Glycol cooler
2) Easy brine chiller
3) Easy chilling tower
4) Easy Cooler

Benefits of Easy Chilling:

- Chills fish, meat & protein while processing
- Chilling tower: Vertical or horizontal
- Multi purpose cooling system
- Material: Stainless steel
- User-friendly touch screen
- Internet connection
- Easy adjustable settings
- Many different sizes
- Energy efficient
- Reliable system
- Reduces risk of contamination
- Easy to clean & sanitize
- Built to customer specification

Easy Chiller & Cooling System

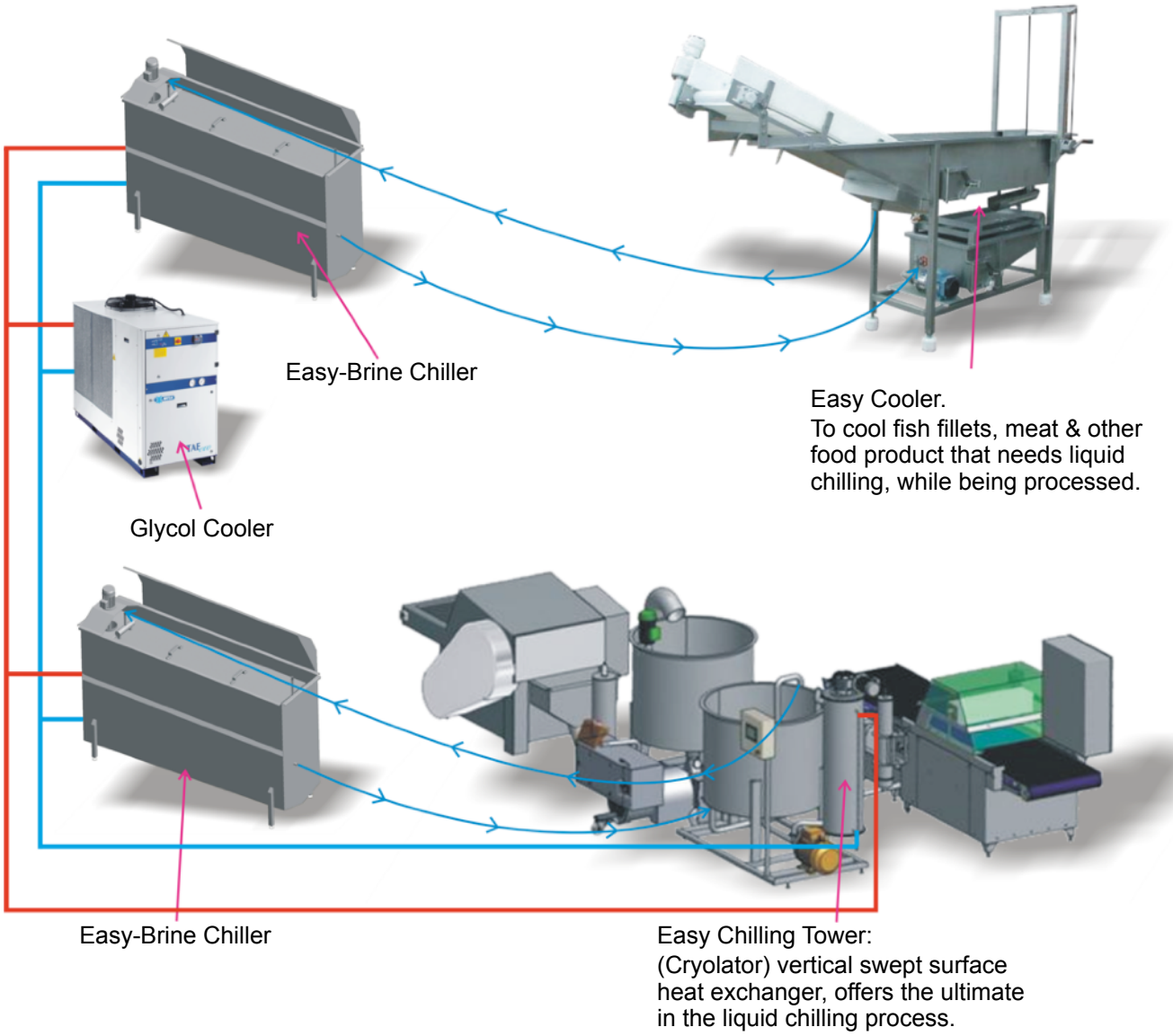

Available is a wide range of Easy Brine Mixing Systems



Optimize your investment with custom-made solutions

Traust technology, LLC., has bee a leader in the development of processing equipment for over 30 years. Our qualified team of engineers, with years of experience, has designed, developed and installed complete processing plants as well as stand alone systems to suit the exact needs of processors around the world

www.traust.is traust@traust.is Office phone: +354-516-3000

TRAUST TECHNOLOGIES