Easy Layer

Automatic laying system for injection machines

TRAUST TECHNOLOGIES

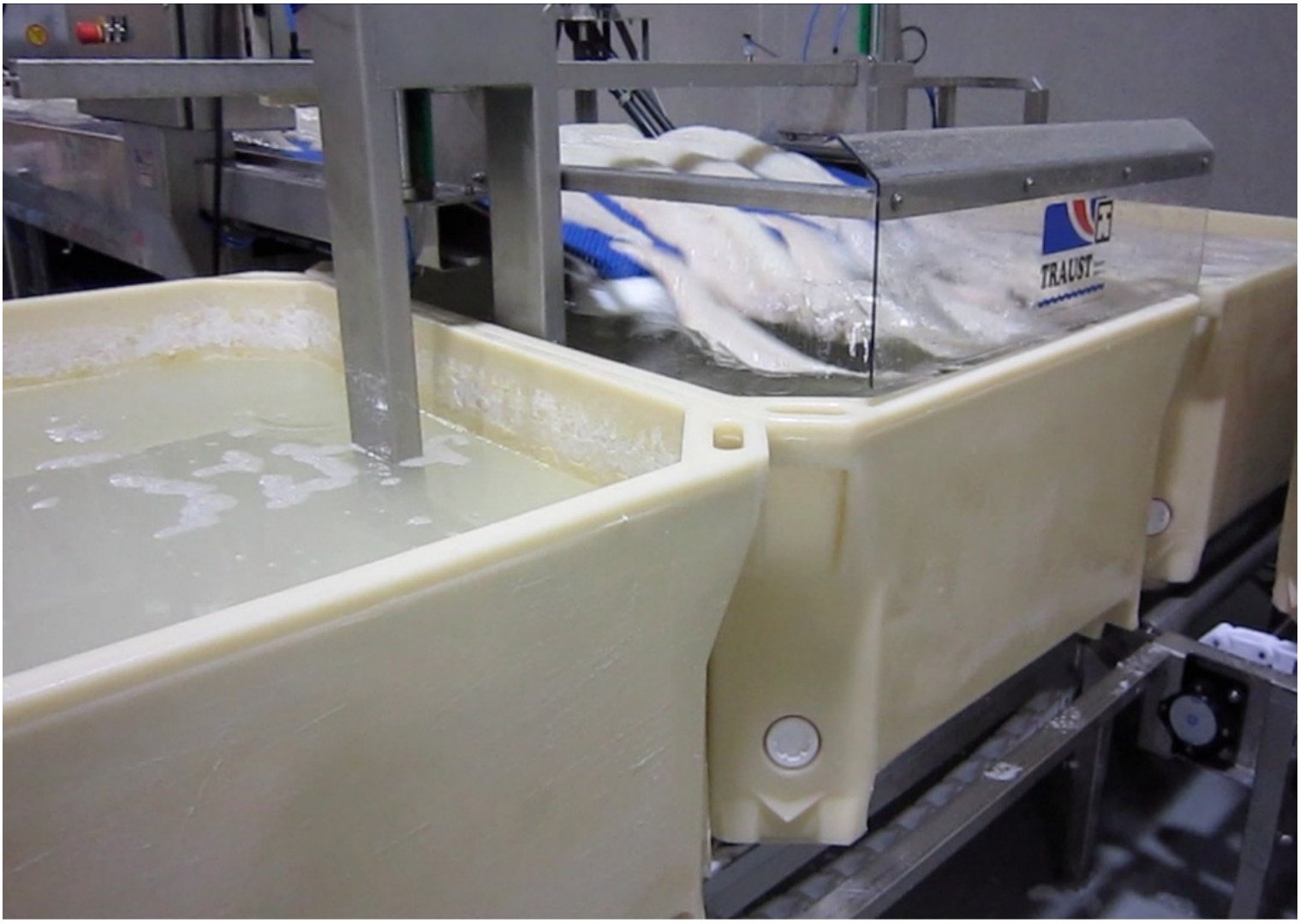

- Better treatment of raw material
- Can be used for any injection machine
- Fast & easy production process
- Easy to clean & sanitize



High Quality Auto Laying System

Advanced auto layer for all types of injection machines. The Easy Layer handles raw material gently

The Easy Layer can be used to lay the product into tub or on a conveyor for example, with precise and gentle touch

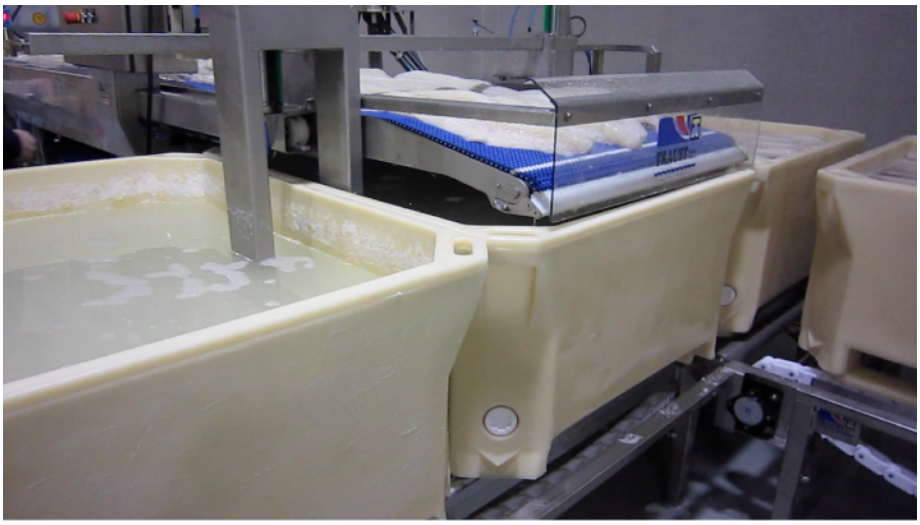

Easy Layer is about to lay the fish fillets into the tub that sits on a Automatic tub system witch moves the tub when it is full for further processing.



You can see the Easy Layer laying the fish fillets gently into the tub.

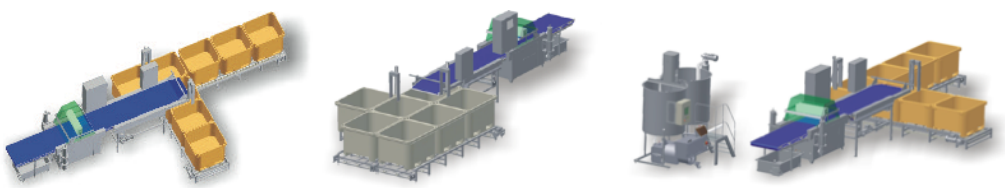

TR 850 Injection machine with Easy Layer and Automatic Tub System

Advanced Easy Layer System

Automation increases speed laying the fish or meat. It lays the product into tubs or onto conveyors

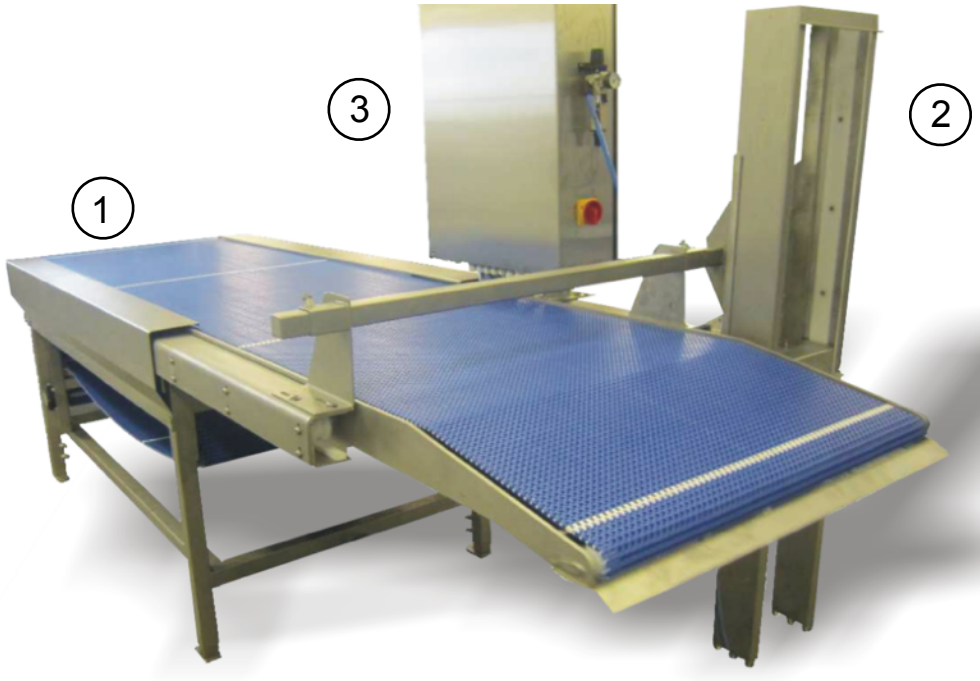

1) Automatic laying conveyor

2) Brine control for automatic tub system

3) Control box with touch screen

Benefits:

- Better treatment of raw material
- Rugged Stainless steel unit
- Automatic process
- Can be used for any injection machine
- Measurable labor savings
- Energy efficient
- Reliable system
- Reduces risk of contamination
- Easy to clean & sanitize



Easy Layer has laid the fish fillets into the tubs waiting for further processing.



TR 850 injector, Easy Layer & Automatic Tub System

Easy Layer

Easy Layer:

The Easy Layer is an industrial grade layer built from stainless steel according to safety standards required by CE regulations.

Easy Layer controls brine level in tubs, and it saves labor and reduces risk of contamination.

Easy Layer can be used in coordination with any Injection machine and Easy Tub handling system. It ensures continuos production with few delays.

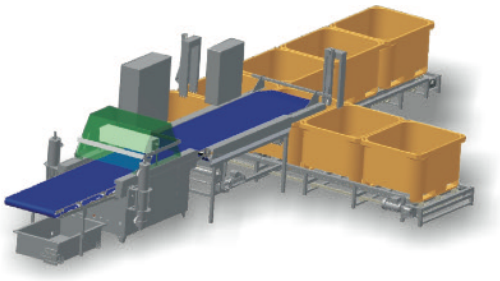

TR - 850 Injector with Easy-Layer
& Automatic tub changing system

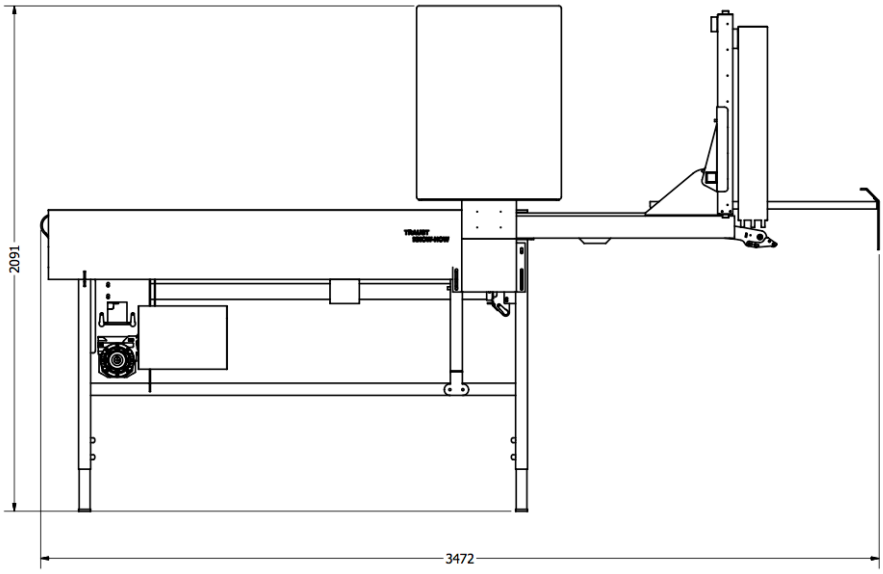

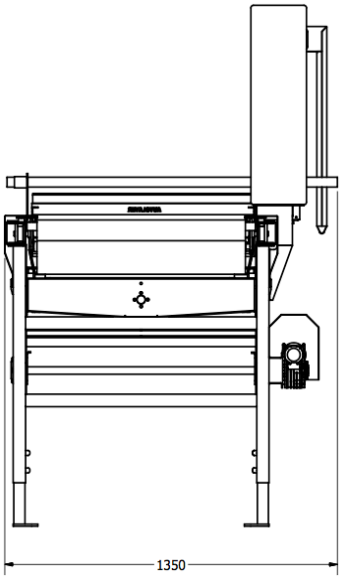

Technical Specification:

Dimensions L x W x H: 3472 x 1350 x 2091mm
Air actuated: Main piston TR-1B 63mm Auxiliary pistons TR-1B 32mm
Air required: Air required 200-300L/min pressure 7-8bar
Voltage: 3x400V – 50 c/s or as required.
Protection level: Mechanical overload protection
Capacity: According to the injection machine
Materials: Stainless steel AISI 304, bead blasted
Belt drive: 1,5Kw 400V 3phase
Weight: 270kg

Optimize your investment with custom-made solutions
Traust technology, LLC., has bee a leader in the development of processing equipment for over 30 years. Our qualified team of engineers, with years of experience, has designed, developed and installed complete processing plants as well as stand alone systems to suit the exact needs of processors around the world