Easy Mincer

Rugged drum mincing machine

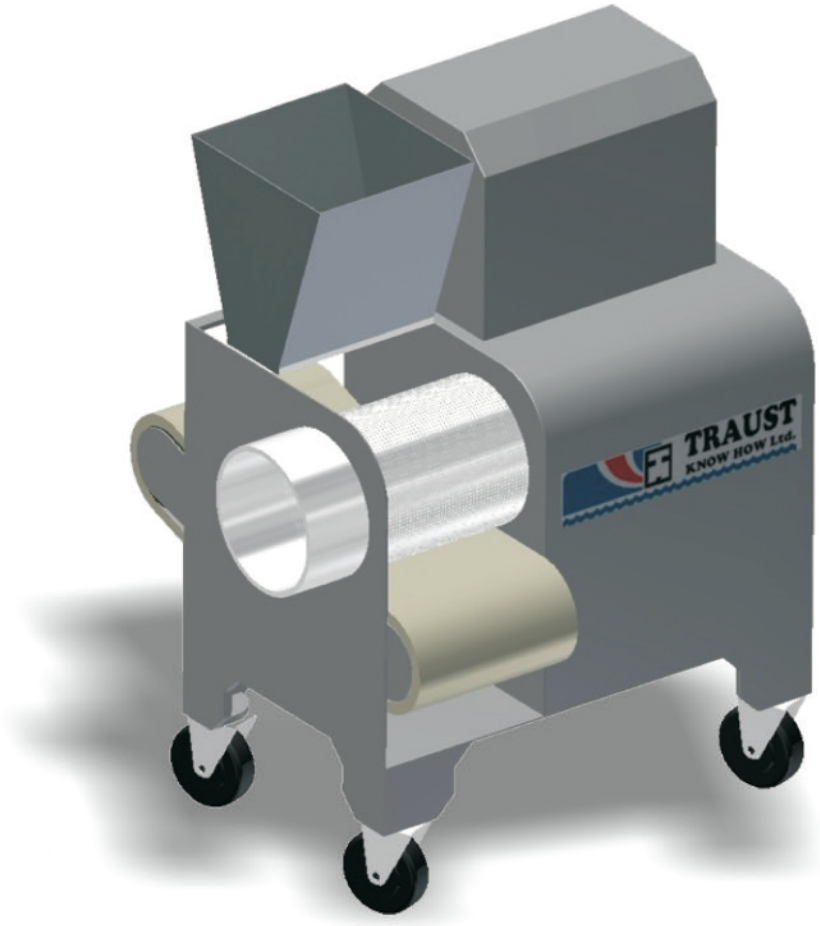

- Highest end product quality
- Reduced labor cost
- Fast & easy production process
- Easy to clean & sanitize
- Small footprint



Easy Flaker that flakes frozen minced fish block for Easy-Inject. “Fish in Fish”

High Quality Easy Mincer

Advanced soft separator mincing machine.
Different raw material can be gentlie refined



Different raw product can be gently refined, e.g.:

- Cut-off or fillet with or without skin
- Skin strips and trimmings
- Whole fish frames and collar bones

A flexible squeezing belt transports the product to a perforated drum and gently squeezes the fish material through the perforation. Harder particles such as bones, fins and skin remain outside of the drum. The raw product and the grid diameter of the drum determine the texture of the final product.

Advanced Easy Mincer System

Minces fish, meat & other food products
Profitable process

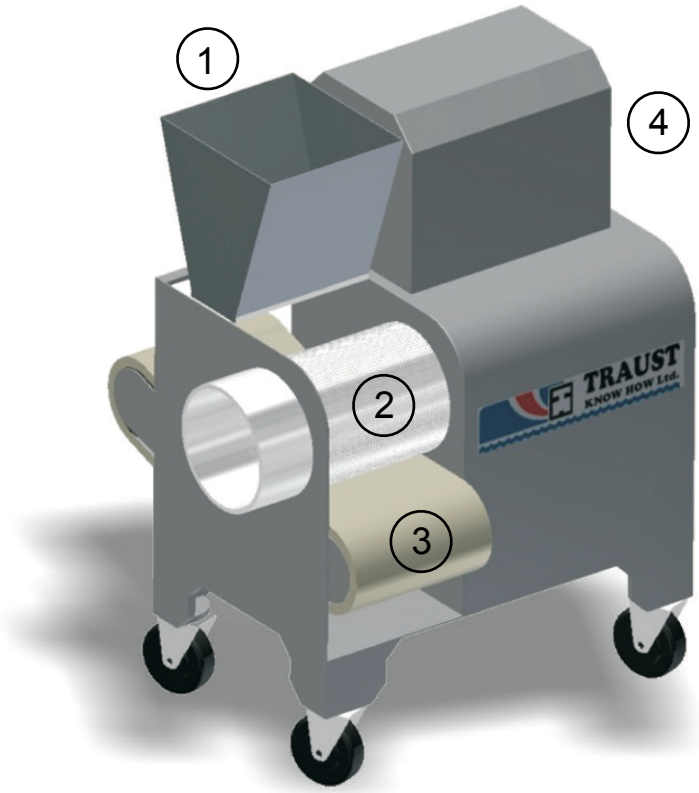

1) In-feed
2) Mincing drum
3) Mincing belt
4) Motor

Benefits:

- Product free from skin & bones
- Highest yield
- Gentle product processing
- Rugged Stainless steel unit
- User-friendly
- Huge labor savings
- Economical & profitable process
- Energy efficient
- Reliable machine
- Sanitary standards recognized world-wide
- Easy to clean & sanitize

Soft Separator:

- Operation requirements : 1 person
- Drum hole diameter: 3mm (other dimensions upon request)
- Throughput:

The throughput values vary extremely independence of the hole size in the perforated drum, the type of feeding, the product and its pre-treatment (e.g. degree of pre-grinding), the feeding temperature, the selected pressure etc. The values for each application have to be determined individually between the customer of the machine and the supplier

Easy Mincer

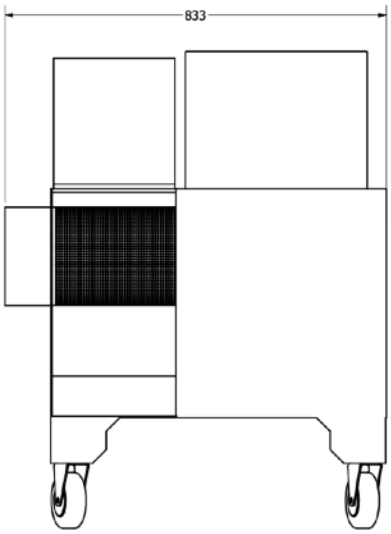

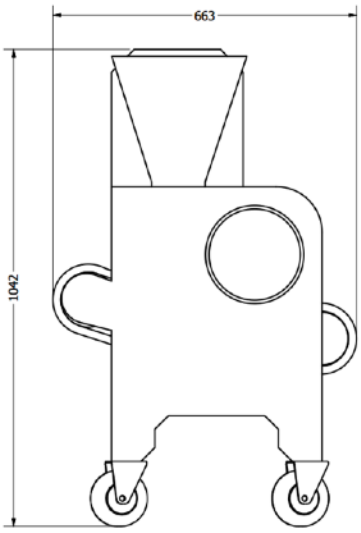

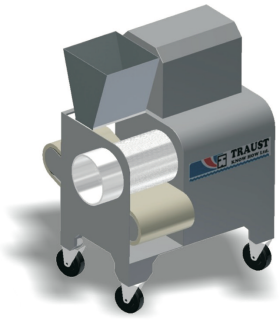



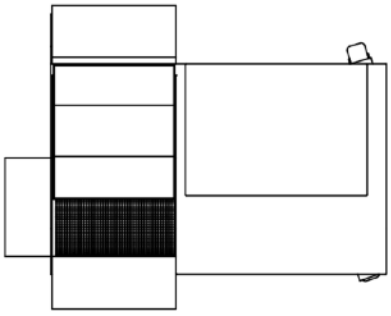

Technical Specification:
Dimensions L x W x H: 833 x 663 x1042 mm
Capacity: Different for each product
Materials: Stainless steel AISI 304
Voltage: 3x400V – 50/60 Hz
Power required: 2,2KW
Weight: 270kg



Easy Flaker flakes the frozen minced fish block then the screw conveyor moves the flakes to the Easy-Inject 1000 witch emulsifies the flakes into protein them the TR-850 injects the protein into the fish fillets, process called " Fish in

Optimize your investment with custom-made solutions
Traust Know How, Ltd., has been a leader developing processing equipment for over 30 years. Our qualified team of engineers with years of experience design and develop all our processing plants/ equipment to suit the needs of processing industries around the world.