Easy Portioner

Advanced portioner for multiple species



- Easy automatic operation
- Fast and accurate portioning
- Capacity: variable according to species Labor saving
- Safe and easy to operate



Advance Portioning

With easy continued adjustment in operation

All Easy Portioner are built according to customer needs and demands.
Easy Portioner can be used to portion most species:

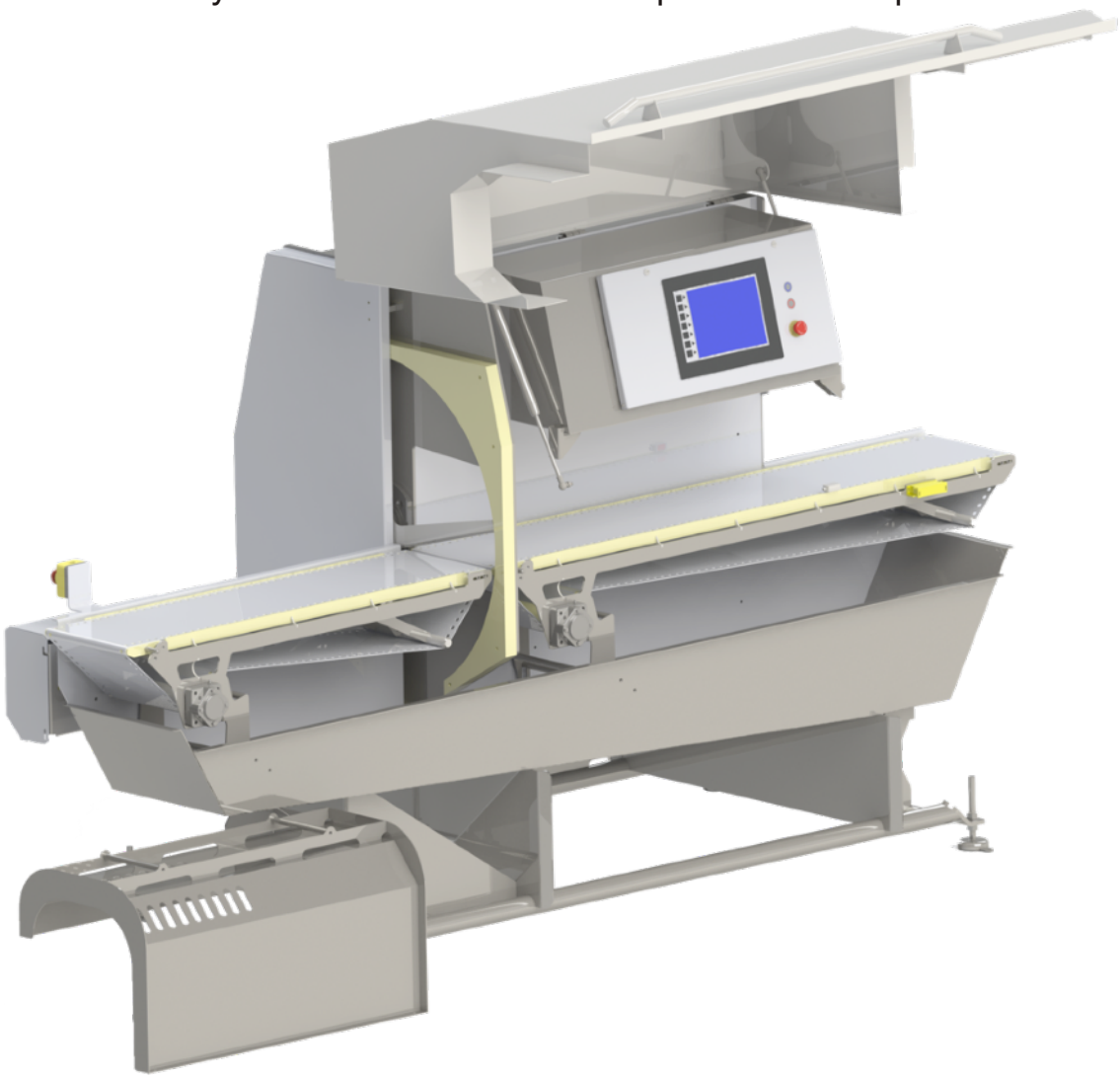

THE EASY PORTIONER:

Combines True 3D High Accurate Laser Scanning with High Speed Servos to accurately cut products such as fillets or whole fish to desired lengths and weights. This software makes the operation, cut selections, and interface intuitive; designed to be used by everyday workers. The system scans a product in motion then calculates cuts to create maximum value portions.

The software optimizes selection of multiple target portions to maximize recovery. A servo driven blade cuts the product into the desired portions with straight, smooth, and precise cuts. The EASY PORTIONER is more ACCURATE, more RELIABLE, and FASTER than any other portioning method. It produces higher yields, higher throughput, and higher productivity with reduced labor cost.

High Speed Portioning

Fast precision portioning, handles raw material gently

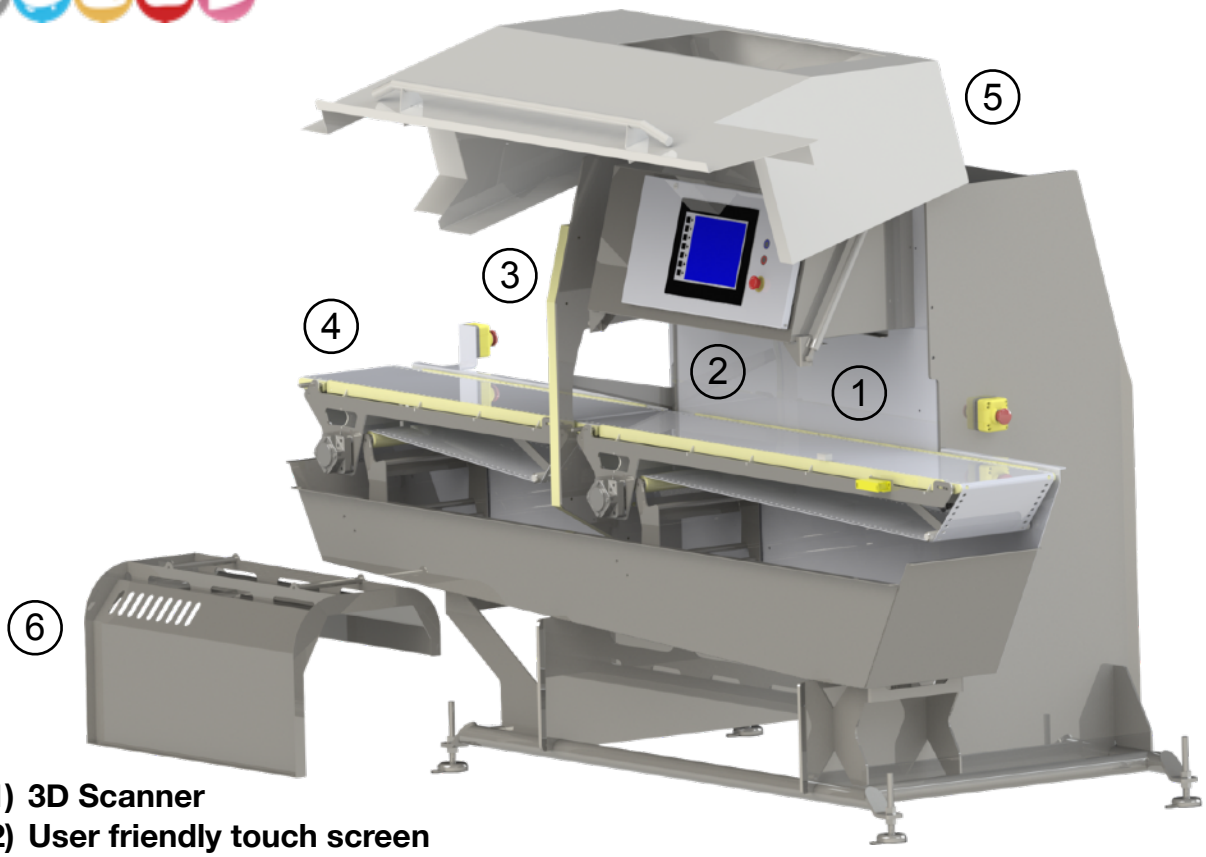

1) 3D Scanner
2) User friendly touch screen
3) Cutting knife
4) Conveyor
5) Scanner cover
6) Conveyor safety cover



Benefits:

- True 3D Scanning on 1.5 mm Grid
- Max 5 Cuts/Second
- Clean and Consistent Cuts
- Highest Precision and Accuracy
- Easy to Operate and Maintain
- Easy to Clean and sanitize
- Safe Operation
- Standard Industrial Components
- Simple Design
- Belts 280mm Wide

After purchase service

When you purchase our equipment, we offer installation to make sure that you will have a quick and smooth production start up.Our service engineers will give the operators a thorough training, cleaning and maintaining the equipment. Our service department is always available for troubleshooting and assistance.

Easy Portioner

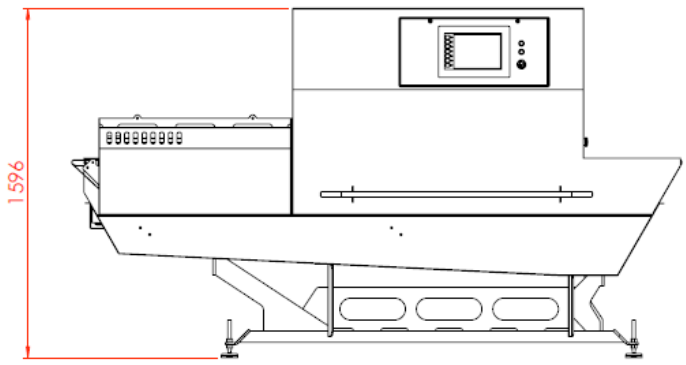

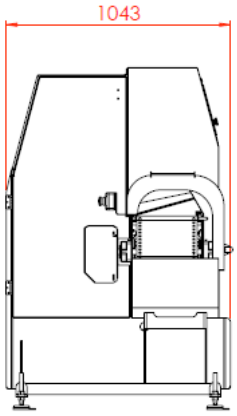

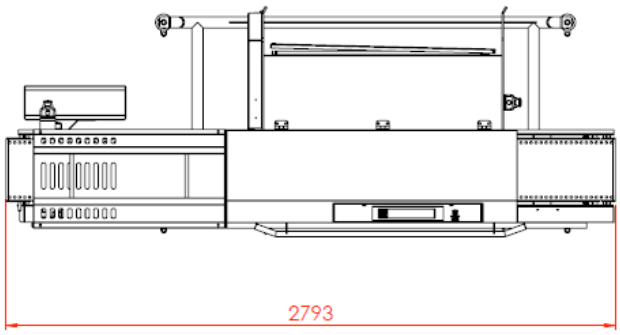

Application:

Fish fillets, Whole fish , Cheese
Boneless meat such as:
Beef, Lamb, Pork and Poultry



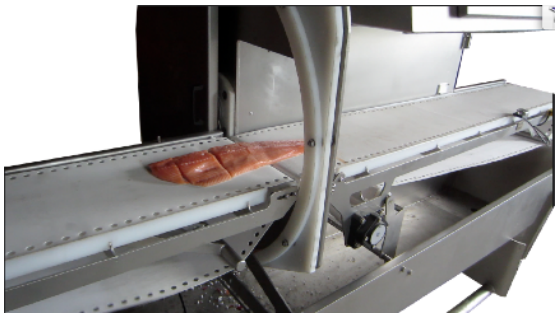

Cut portions

Optimize your investment with custom-made solutions
Traust technology, LLC., has bee a leader in the development of processing equipment for over 30 years. Our qualified team of engineers, with years of experience, has designed, developed and installed complete processing plants as well as stand alone systems to suit the exact needs of processors around the world