Easy Stockfish Press

TR-A2000 heavy duty automatic stockfish press

TRAUST TECHNOLOGIES



- Easy automatic operation
- Minimum labor required
- Pack´s 30kg. sacks
- Safe and easy to operate
- Small footprint



Advanced Packing Processes

Manual & automatic stockfish press solutions

Model: TR-M100



Model: TR-A1000



Model: TR-A2000



Assembly options	Model: TR-M100	Model: TR-A1000	Model: TR-A2000
Manual weighing	●		
Manual in-feed	●		
Automatic weighing		●	●
Automatic in-feed		●	●
Inspection speed conveyor			●
In-feed buffer		●	●
Crusher-separator		●	●

Available is an extensive range of fish drying solutions with modules addressing each manufacturing state. With years of experience our solutions are state of the art with optimum drying at minimal energy cost, automated stacking and de-stacking as well.

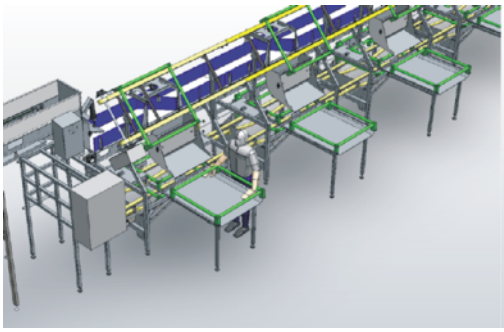

Processing line

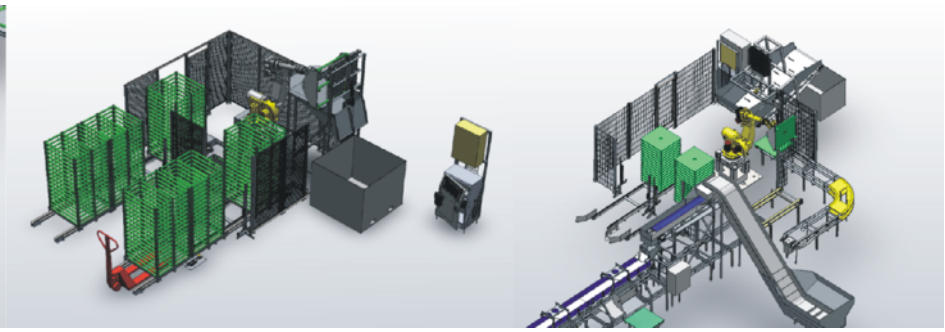

Unloading and re-stacking robotic solution

High Quality Output

Complete automatic stockfish press solutions

Model: TR-A2000



Benefits:

- Fast & easy packing process
- Complete solution
- Minimum labor required
- Energy efficient
- Measured labor savings
- Flexible processing modules

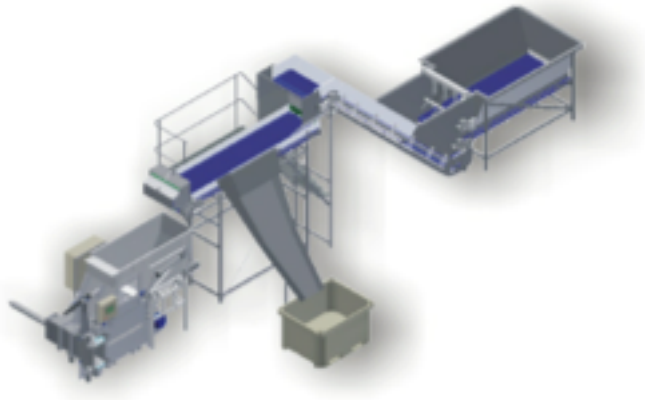

Available is an extensive range of fish drying solutions. We have available conveyor drying system solutions, spiral system drying solutions and tray system solutions.



Auto feeding & Weighing



Drying tunnel



Drying tunnels



Humidity control

Easy Stockfish Press

The new generation stockfish press has a number of new features.

The dry fish loading compartments are much bigger than on earlier model. More effective and easier than before. Especially when loading bones and fish frames into the stockfish press.
The press has a more powerful and effective hydraulic system that allows the press to work at higher speed than before. Movement has very accurate "built-in" sensors to the hydraulic cylinders.
All length's are shown on display with easy adjustment for length and movements of all cylinders.
New type of extremely fast and accurate weighing cells.

Bigger color touch screen with easy access to all adjustments and monitoring.

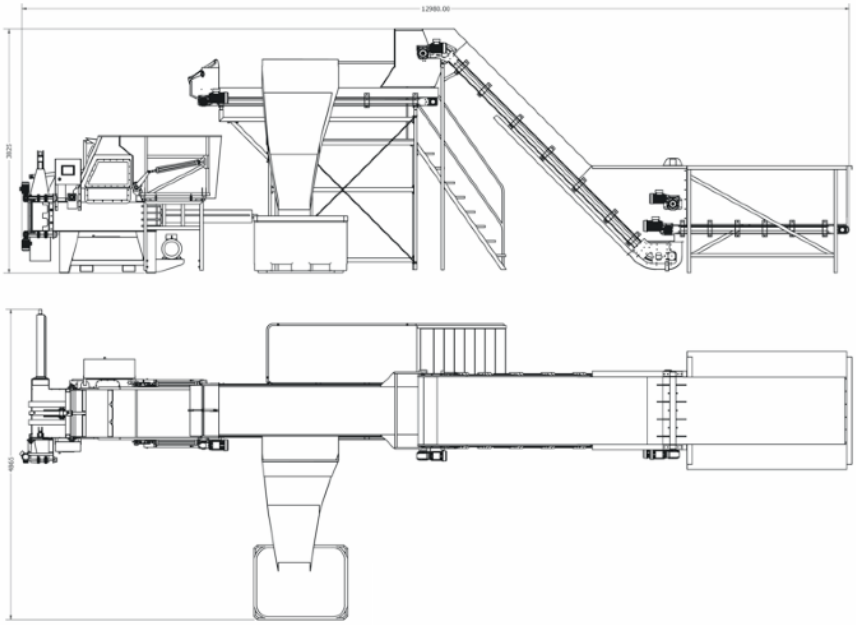

Specification:

Dimensions L x W x H: 3374x2312x1989 mm
Weight: 1680 Kg
Voltage: 3 x 380-480V 50/60 Hz
Power required: 18 Kw
Capacity: 70-80/30Kg bags/hour
Bag size: 700x450x230mm
Bag quantity/40'High cube cont: 700pcs 30Kg bags Hydraulic tank: 320L
Material: Hardox/37/Stainless steel
Certificate: CE



Weighing & packing



Loading container with Easy Container Stacker



Bags in container

Optimize your investment with custom-made solutions
Traust Know How, Ltd., has been a leader developing processing equipment for over 30 years. Our qualified team of engineers with years of experience design and develop all our processing plants/ equipment to suit the needs of processing industries around the world.