Flow-scale

Simple & Quick weighing for food products

TRAUST TECHNOLOGIES



- Easy automatic operation
- Fast & accurate weighing
- Simple batching
- Easy installation
- Safe & easy to operate



Advanced Weighing

Gentle weighing and sorting for any food product

Capable of weighing and grading many different weight categories.



The Flow-scale is robust with a user-friendly touch screen and Ethernet connection for data logging. The highly economical Flow-scale is a part of a line of low-cost advanced processing equipment that offers essential high-tech machine. Suitable for simple weighing and grading of a wide variety of products, the grader is designed to fulfill the needs of small and medium sized companies. The Flow-scale is ideal as an add-on for larger companies requiring a machine that can handle temporary or seasonal overflow needs that do not justify the expense of a full-size grader.



Fresh Product Grader

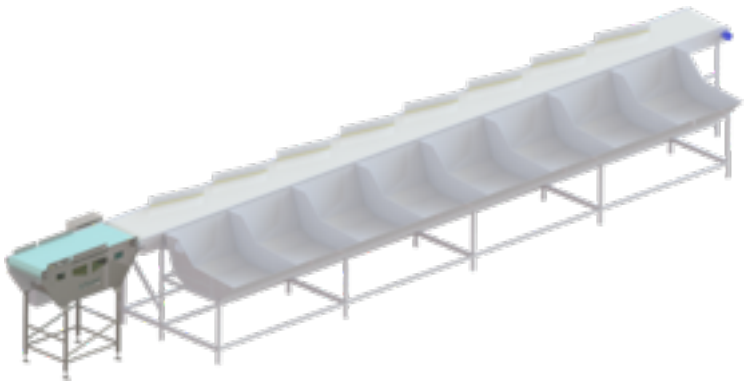

Salt Fish Grader

Easy weighing & Grading

Fast precision weighing, handles raw material gently



1) Flow-scale
2) Conveyor
3) Display
4) Conveyor motor
5) Adjustable legs

Benefits:

- Fast precision weighing
- Automatic process
- User friendly interface, touch screen
- Ethernet connection
- Handles raw material gently
- High capacity grading
- Energy efficient
- Standard solution
- Easy to clean & sanitize
- Safe & easy to operate

Operating the Flow-scale

The Flow-scale weigh products to keep track of yield and throughput in your production. The Flow-scale ca be easily added on to you product monitoring system and to your product lines. Production data is transmitted in real time over an ethernet port which can be collected by an external database. The Flow-scale can be customized to your needs.

Flow-scale



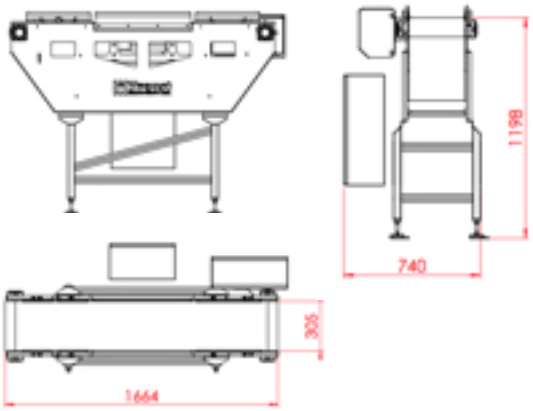

Specification:
Dimensions L x W x H: 1664 x 740 x 1198mm
Accuracy: 2g for pieces under 500g, otherwise 5g
Capacity: 120 pcs/min
Product length: 50mm - 1000mm
Display: Touch screen
Power: 700W
Voltage: 1x208-230 V
Frequency: 50/60Hz.
Current: 3amp.
Weight: 205kg.

Available is a wide range of graders, to grade most food products

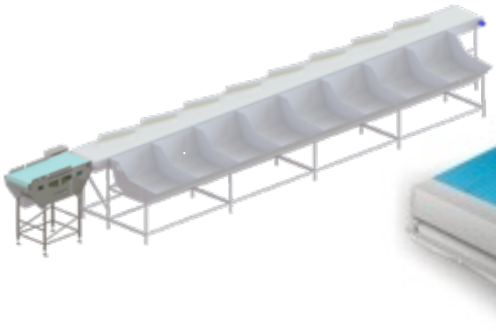

Salt Fish Grader



Pelagic
Channel Grader



Herring, Mackerel & Scallop
Channel Grader

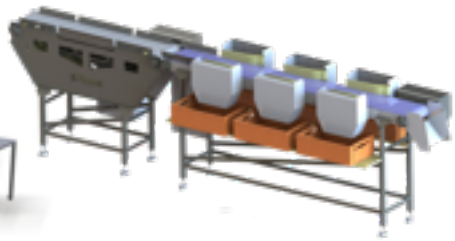

Fresh Product Grader

Optimize your investment with custom-made solutions
Traust Know How, Ltd., has been a leader developing processing equipment for over 30 years. Our qualified team of engineers with years of experience design and develop all our processing plants/ equipment to suit the needs of processing industries around the world.