Traust Injectors

Superior HI-Tech Intelligent Injector



- Easy adjustment for various injection levels
- Increases yield & quality
- High capacity
- Allows low pressure injection
- Small footprint



Traust Technologies

Advanced Injection Solutions for All Applications

- User-friendly interface for injection adjustments
- Large colour touch screen with ethernet connection
- Optional integrated scales allows for constant monitoring of injection levels
- Pre-installed recipes and automatic brine control
- Injection pump control reduces brine loss by stopping flow when needles are out of the product
- Fully adjustable injection stroke and advance
- High performance integrated filter system
- Large range of injection levels
- Needle design adjustable for delicate products
- Needle size from 1.6mm to 3.0mm O.D, available for every application
- Low pressure, high volume injection ensures consistency and high quality finished products
- Simple yet effective design eliminates chains, and springs for easy sanitation and maintenance.
- Heavy duty construction with low maintenance demands
- Unrivalled quality with the lowest cost of ownership in the industry
- Head designed for easy access, for both bone-in and boneless applications
- Easy to clean and sanitise, with a quick access needle head
- All Traust Injectors are fully compatible with our “Protein-Tec®“ suspension system



Small footprint



Easy to clean





Salmon fillets

Increase the total weight in IQF and smoke applications



Cod fillets

Increase the profit of the final product by injection.



Chicken

Reach target injection and marination levels with ease



Beef and Pork

Optimal marination without muscle damage

High Quality Output

Multiple processing solutions

Optional crane enable
exchange of the injection head
in a matter of minutes



TR-850
with Plastic Belt



TR-400
with Stainless Belt

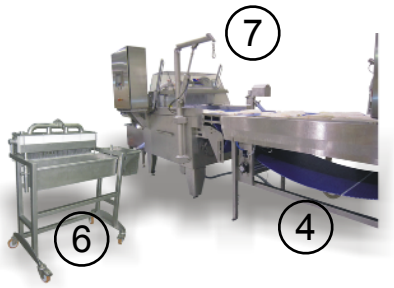

Needle head service
table / tray

1) Touch Screen; safe and easy to operate
2) High needle density
3) Filter system included
4) Easy Layer conveyor system
5) Return hopper included
6) Needle head service and cleaning table
7) Needle head cleaning & service crane

1

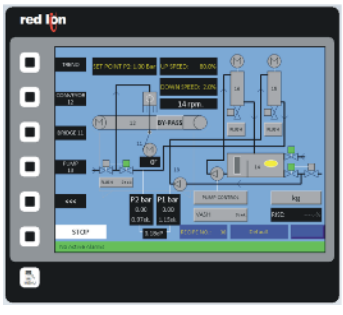

Touch screen
user-friendly interface

Benefits:

- Integrated **Protein-Tec** System Controls
- User-friendly Touch Screen
- New Easy Remote ethernet manager
- Adjustable injection levels
- Superior filters prevent clogging
- Multiple injections programs
- Up to 968 bone-in and boneless needles
- Low return volumes
- Electronic pressure controls
- No chains, springs or bearings
- Easy to clean and sanitize
- Optional: Needle head service crane
- Optional: Needle head service table
- Optional: Scale to monitor injection levels
- Most advanced injector on the market
- Simple and easy to maintain
- Lowest cost of ownership available

Traust Injector Models

Reference Data	TR-850-968	TR-400-512	TR-400-256	TR-400-128	TR-200-56
No. of needles (pcs)	968	512	256	128	56
Belt width (mm)	850	400	400	400	200
Total Power (kW)	7,5	4,0	4,0	3,5	2,5
Capacity up to (kg/h)	9000	4500	2000	1000	1000
Strokes/minute	10-40	10-40	10-40	10-40	10-40
Stroke advance (mm)	0-140	0-140	0-140	0-140	0-140
Head clearance (mm)	127/240	127/240	127/240	127/240	127/240
Weight (kg)	1150	850	710	700	400
Air required (l/min, bar)	50, 6,0	50, 6,0	50, 6,0	50, 6,0	50, 6,0
Dimensions L*W (mm)	3975*1860	3975*1410	3975*1410	3975*1410	3975*1210
Dimensions H (mm)	2295	2295	2295	2295	2295
Filters auto-release	2 x pressure	2 x pressure	1 x pressure	1 x suction	1 x suction
Needles sizes (mm)	All outer dimension available for all applications				
Voltage (Volt, Hz)	3 x 380-480 plus neutral - 50/60				
Certificate	CE	CE	CE	CE	CE

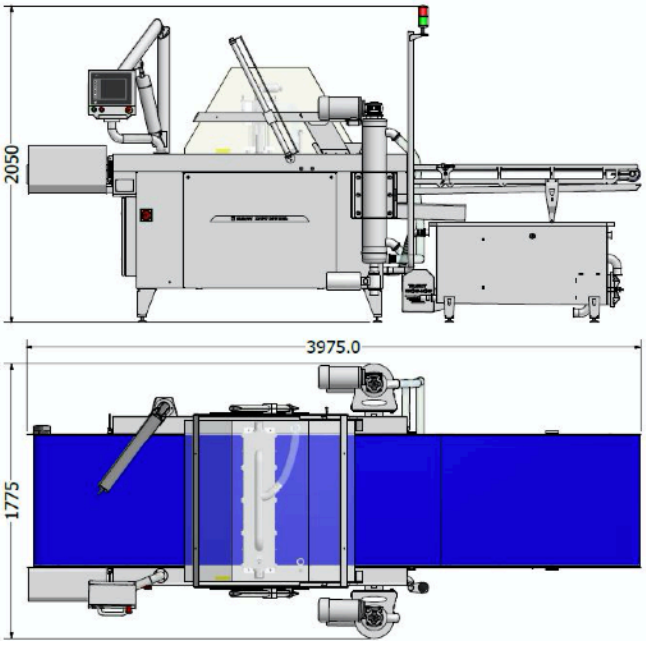

Exact through-put capacity of an injector depends on :

1. Loading or kg/m2 on the belt
2. Advance setting (0- 140mm)
3. Number of strokes per minute (up to 40 strokes/min)

“Protein-Tec”

Protein-Tec is our system for producing a suspension using undervalued trim and reintroducing it to the meat via Injection. This results in greater yield and profit by increasing green weight and producing a high quality, consistent product.
For more info request our **Protein-Tec** brochure.

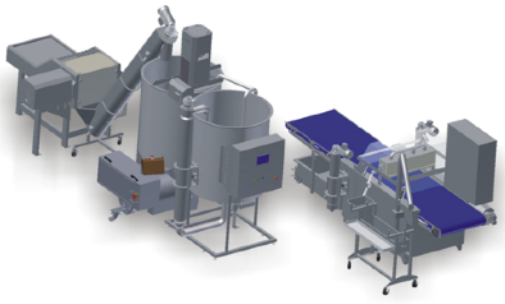

Optimize your investment with custom-made solutions
Traust Know How, Ltd., has been a leader developing food processing equipment for over 30 years. Our qualified team of engineers with years of experience, design and develop all our food processing plants/equipment to suit the needs of food processing industries around the world.