Protein-Tec 1000

Superior Protein Injection System

TRAUST TECHNOLOGIES



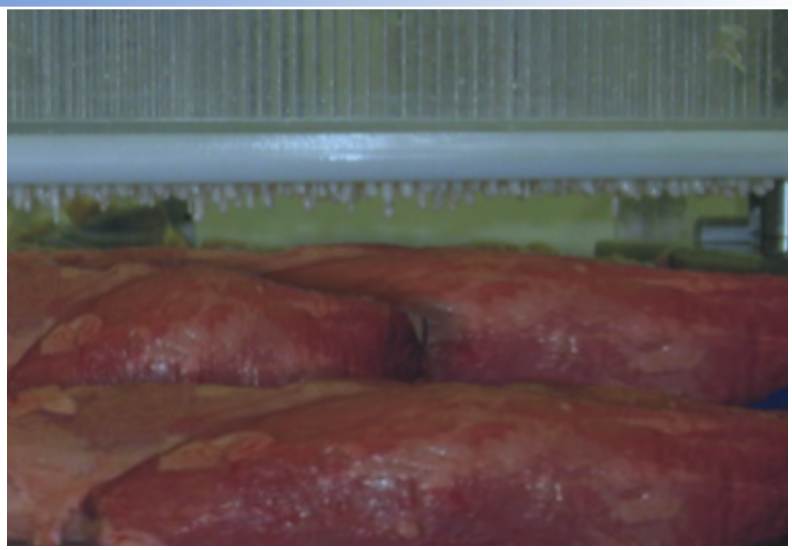





- Easy adjustment for all injection targets
- Increases yield - Greater profits
- Reduced drip, cook and chill loss
- Greater overall appearance
- Better finish product quality
- No label declaration changes



Advanced Protein Injection

User-friendly controls / Applications for all products



Protein-Tec 1000 with brine plate chiller



TR850 Injector



Brine mixing system



Glycol cooler



Easy Chiller



Salmon Fillets

Increase the total weight of the product for the end user



Cod Fillets

Increase the profit of the final product by injection.



Injecting Chicken Breasts

Increase the total weight of the product without label implications



Making Corned Beef

Increase cook and slice yield

Advanced Raw Material Usage

Increase yields by injecting high quality trim



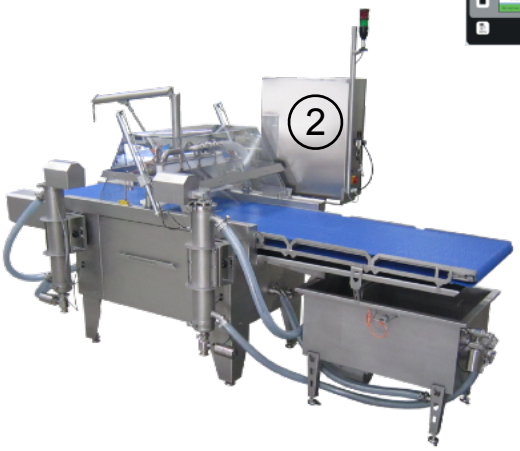





"Protein-Tec"

1) Touch Screen; user friendly interface
2) TR-850 Injector
3) **Protein-Tec** Emulsifier container
4) **Protein-Tec** Protein container
5) **Protein-Tec** Protein Emulsifier
6) Easy Flaker
7) Easy Chiller Tower
8) Easy plate cooler

Benefits of Protein-Tec + TR-injectors

- Integrated **Protein-Tec** System
- User-friendly Touch Screen
- With ethernet connection
- Easy to change from brine injection to **Protein-Tec**
- Adjustable for all injection levels.
- Increase protein binding
- Less drip or loss after injection and after thawing
- Greater raw material yields
- No sign of the suspension in the product
- Superior filters prevent clogging
- Low return volume
- Electronic pressure control
- No valves, chains or bearings
- Most advanced injector on the market

Protein-Tec

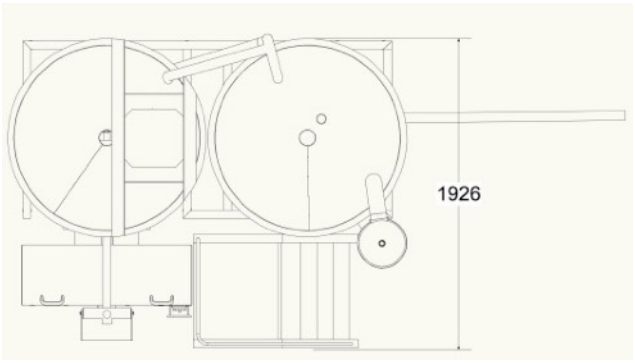

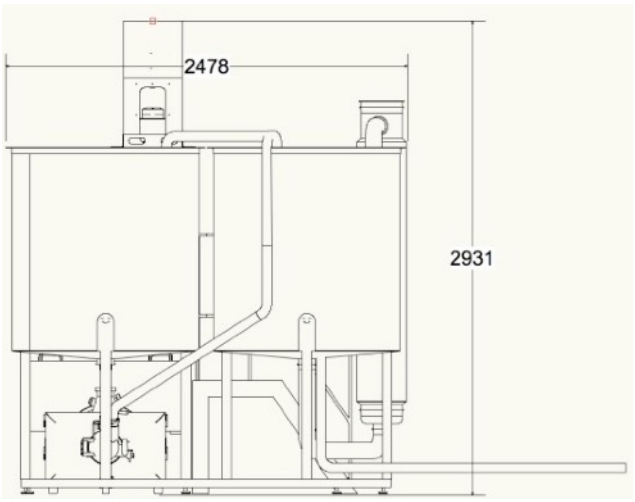



Specification:

Dimensions L x W x H: 2478 x 1926 x 2931 mm
Weight: 1050 Kg
Voltage: 3 x 380-480V, 50/60 Hz
Current at 400V : 75 A Pre-fuse 400V: 3x100 A
Power required: 30 Kw
Air required: 50 l/min

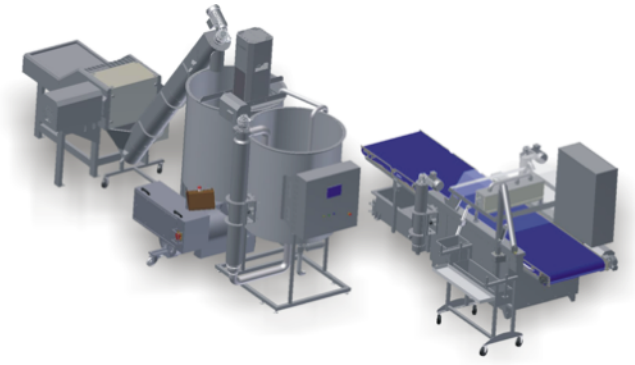

“Protein in Protein”

Protein-Tec is our system for producing a suspension using undervalued trim and reintroducing it to the product via injection. This results in improved yields and greater profits while delivering a quality product. For more info go to www.traust.is

Optimize your investment with custom-made solutions
Traust Know How, Ltd., has been a leader developing food processing equipment for over 30 years. Our qualified team of engineers with years of experience, design and develop all our food processing plants/equipment to suit the needs of food processing industries around the world.