Scallop Processing Plant

Superior Scallop Eviscerator system

TRAUST TECHNOLOGIES



- Economical Eviscerator system
- Increases quality
- Environmental and user friendly
- Labor saving
- Safe & easy to operate



Advanced Process

Automatic solution greatly reduces manual labor for land-based and on-board factories.

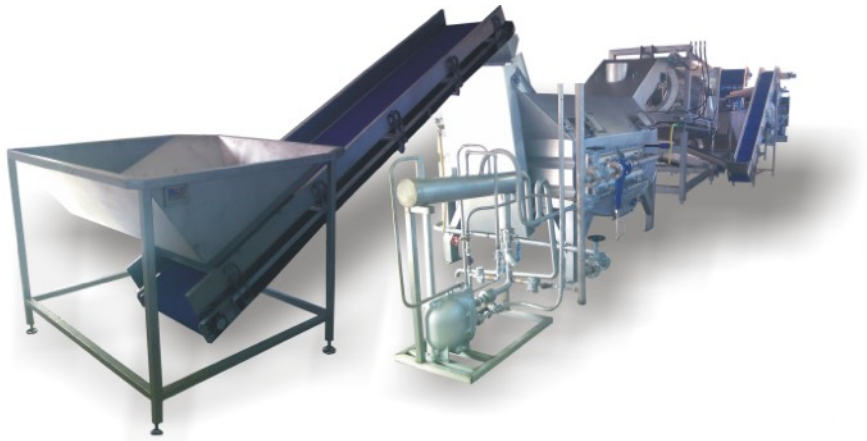

All land based Scallop processing factory´s are built according to customer needs and specifications.

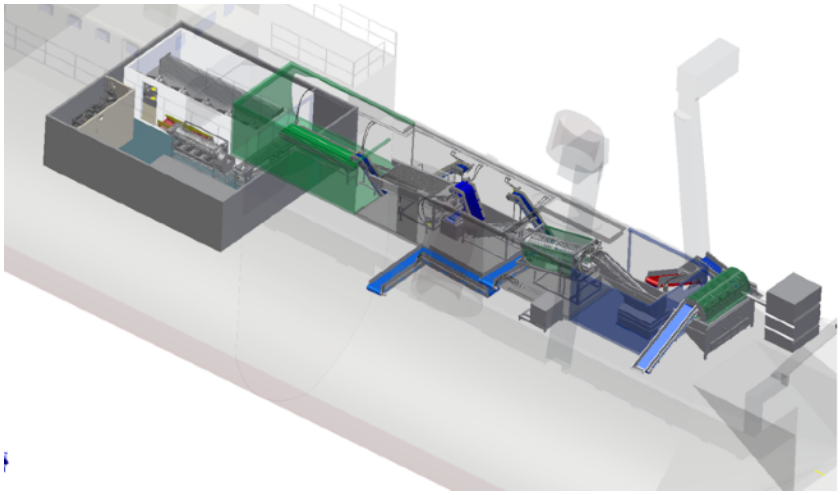



On-board Scallop processing factory´s are designed and built to each vessel specification



Shell separator



Eviscerator in action



Processed Scallop



Scallop tunnel freezer

High Quality Output

Fast, precision scallop processing, grading & freezing. Gentle raw material handling throughout.

1


2


3


4


5
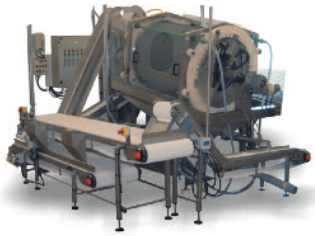

6


7
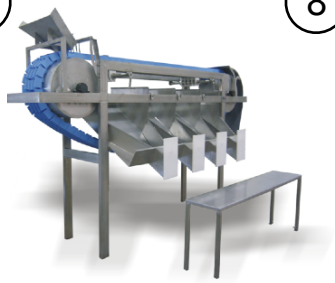

8
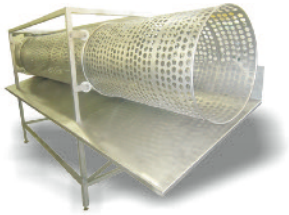

9


10


1) In-feed buffer
2) Scallop shell steamer
3) Shell separator
4) Brine separator
5) Eviscerator (drum)
6) Eviscerator (flat-bed)
7) Scallop channel grader
8) Scallop size sorting
9) Conveyors
10) IQF. freezing tunnel

Benefits:

- Complete solution
- Automatic process
- Handles raw material gently
- Easy to change between different sizes
- Capacity at your request
- Measurable labor savings
- Greater raw material yield
- Flexible grading capabilities
- Easy to clean & sanitize
- Safe & easy to operate



Eviscerator in action



Scallop from Eviscerator conveyed sorting



Scallop size sorting

Scallop Processing Line

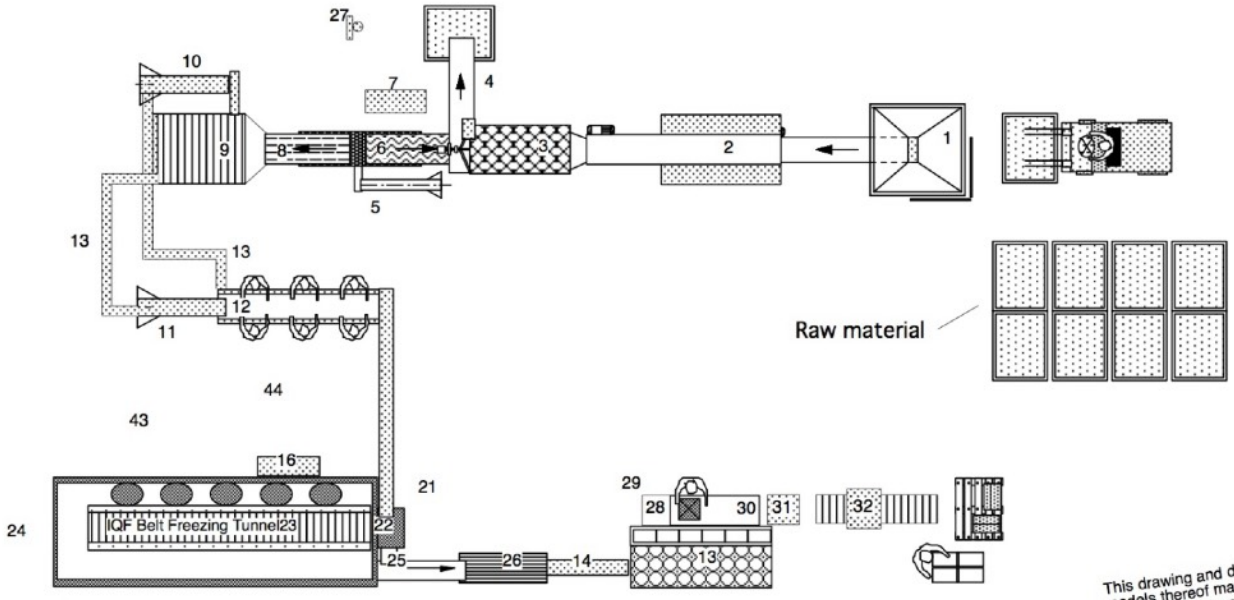

1 Silo of stainless steel, with conveyor
2 Choker small, heat exchanger or oil burner
3 Shucker of a tumbler type
4 Conveyor for empty shell to disposal.
5 Conveyor to brine separator
6 Separator for meet and shell fractions
7 Brine mixer for separator
8 Conveyor to eviscerator
9 Eviscerator
10 Conveyor for refeeding the Eviscerator
11 Conveyor for feeding fine trimming table
12 Fine trimming conveyor table
13 Chutes for transport of scallop
14 Conveyor for feeding size grading machine.
15 Size grading machine for 6 sizes of scallop.
16 Electrical control box.
21 Conveyor for feeding freezer
22 Spreader for belt
23 IQF freezer for without compressors
24 Compressors system for IQF freezer
25 Conveyor out of freezer
26 Glazing equipment
27 UV-sterilizer for glacing water
28 Conveyor to scale
29 Scale with display
30 Packing table
31 Vacuum packing machine
32 Strapping machine

This drawing and description or models thereof may not be used, reproduced or transmitted in any form or by any means, included recording,or by any information storage and retrieval system, without permition in writing from the author

Capacity of whole line :
1500-2000 kg/h raw material

Customer:	
Title:	**Scallop Processing Plant**
Date: March. 2012	**TRAUST**
Dsgn.:	
Drwn.:	
Appr.:	Drwg. No.: 9760-01
Scale: 1: 100	

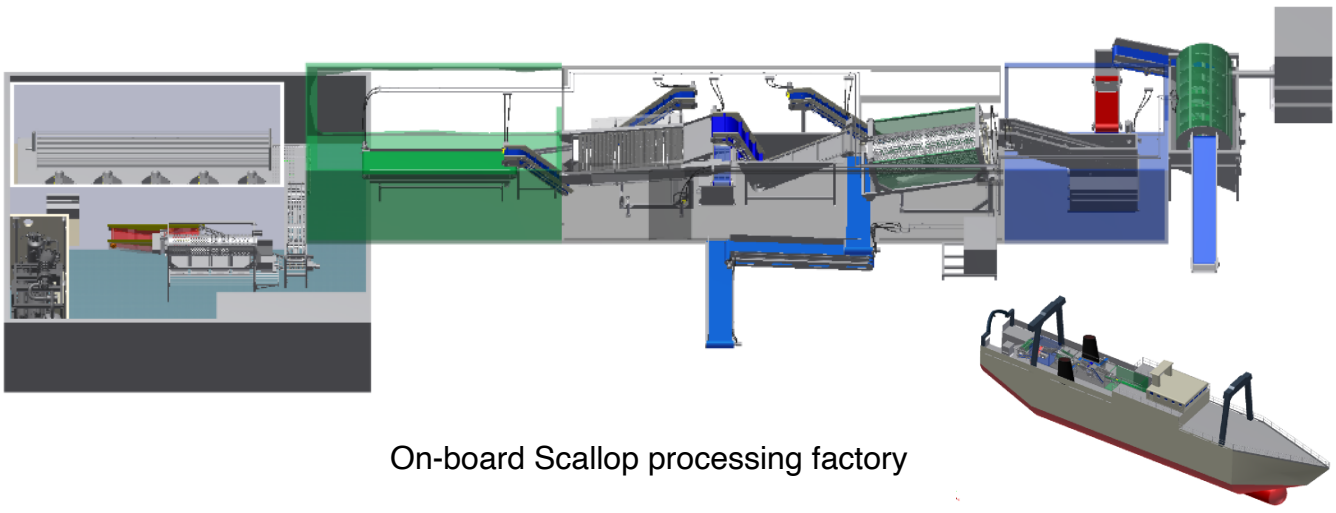

On-board Scallop processing factory

Optimize your investment with custom-made solutions
Traust technology, LLC., has bee a leader in the development of processing equipment for over 30 years. Our qualified team of engineers, with years of experience, has designed, developed and installed complete processing plants as well as stand alone systems to suit the exact needs of processors around the world