Tub Tipper

Advanced solutions for processing

TRAUST TECHNOLOGIES

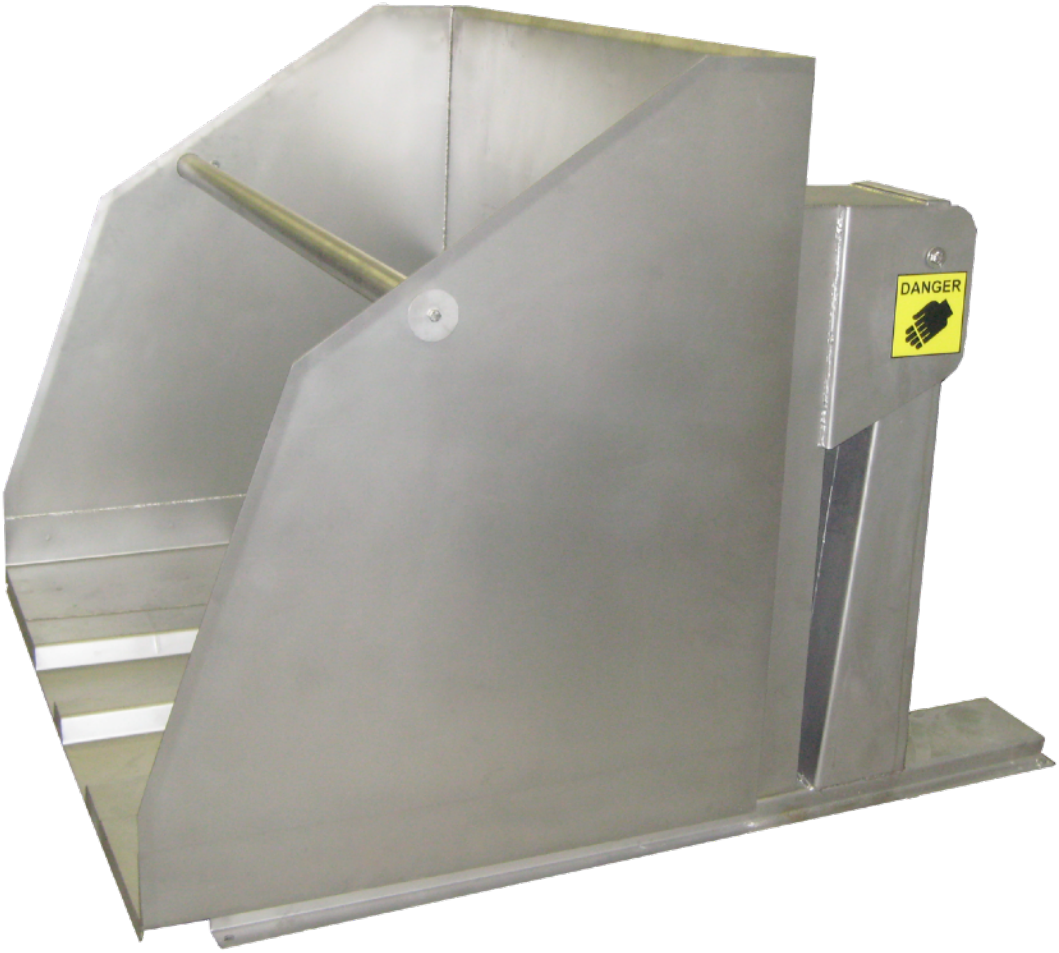

- Economical system
- Fast & easy production process
- Increases quality
- Small footprint
- Safe and easy to operate



Tub Tipper

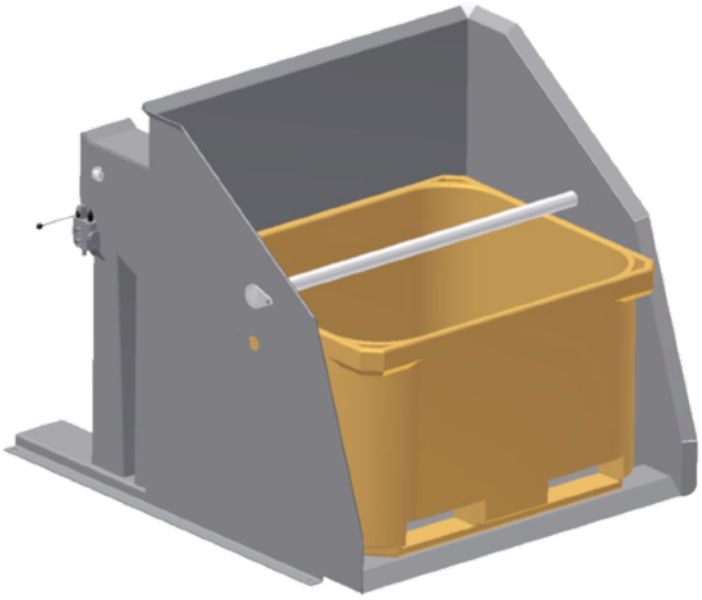

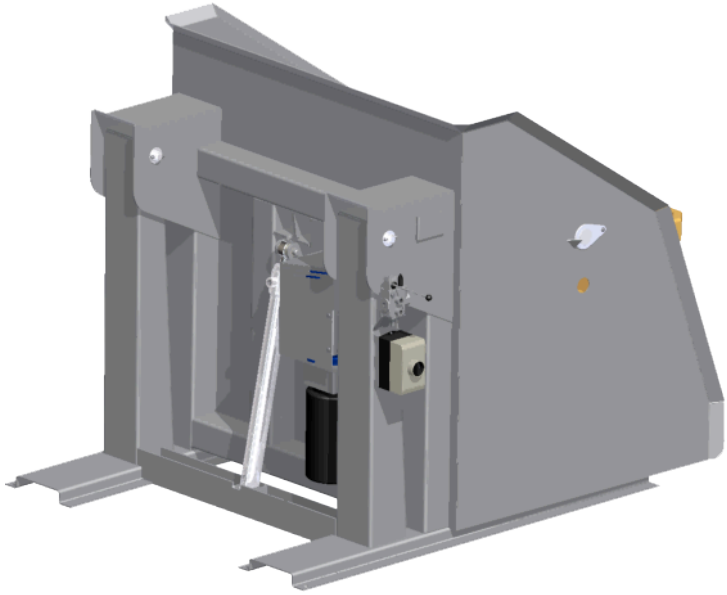

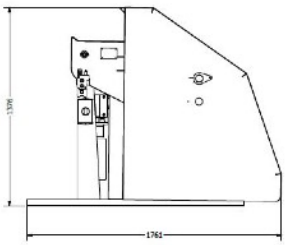

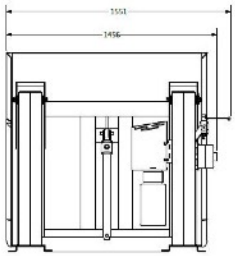

Technical Specification

Dimensions L x W x H	1761 x 1551 x 1376mm
Hydraulic actuated:	NH30A50
Hydraulic system	Onboard
Safety:	Hydraulic drop safety
Materials:	Stainless steel AISI 304, bead blasted
Voltage:	1,5Kw 400V 3phase
Weight:	270kg
Certificate:	CE

"Tub Tipper"

TupTipper is additional to the salt spreader for salt re-use and better economy

Optimize your investment with custom-made solutions

Traust technology, LLC., has bee a leader in the development of processing equipment for over 30 years. Our qualified team of engineers, with years of experience, has designed, developed and installed complete processing plants as well as stand alone systems to suit the exact needs of processors around the world