Easy Chiller & Cooling Systems

Advanced chilling & cooling solutions

TRAUST TECHNOLOGIES

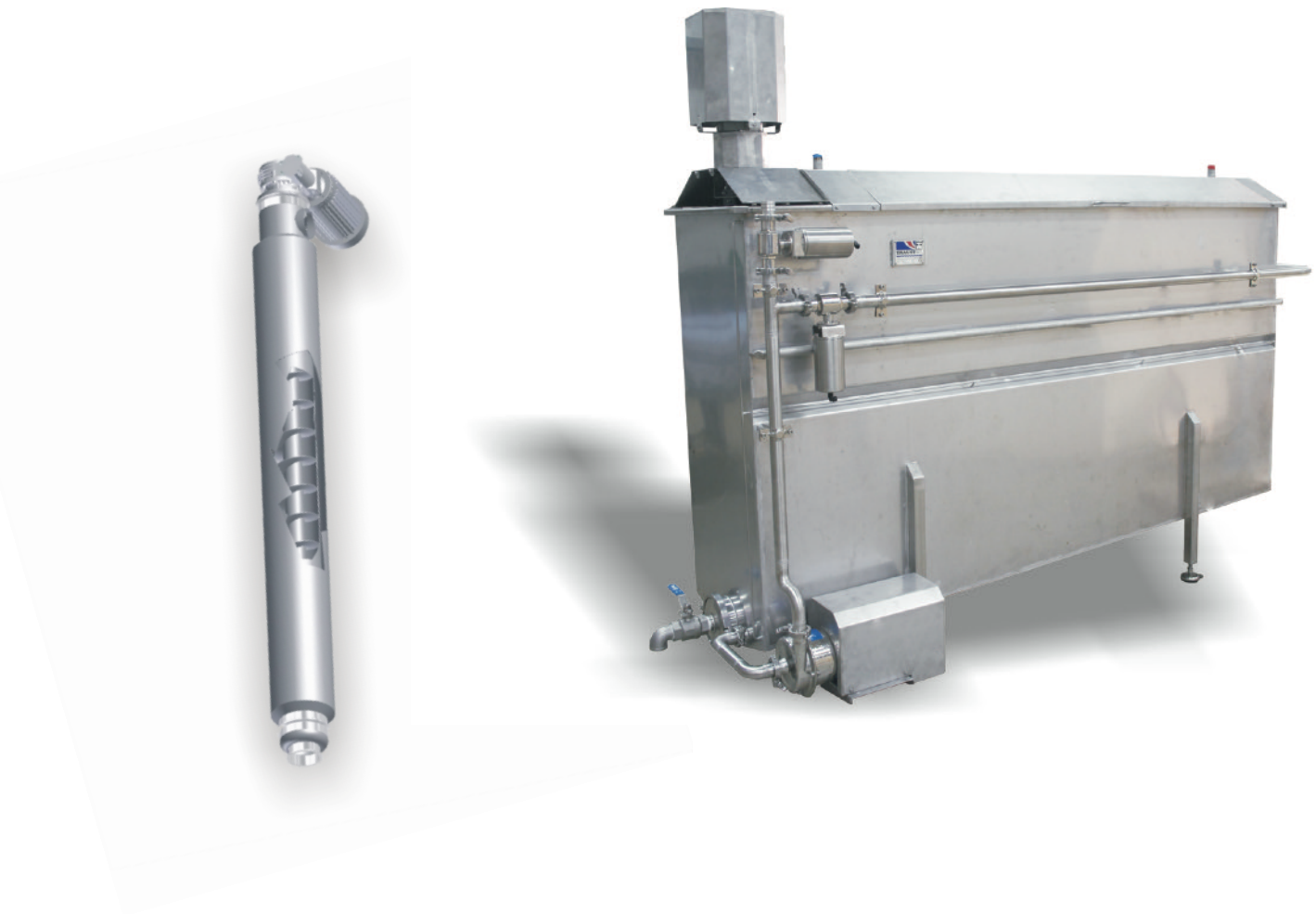

- Rugged chilling & cooling systems
- Multi function system
- Easy process
- Easy to clean & sanitize
- Small footprint

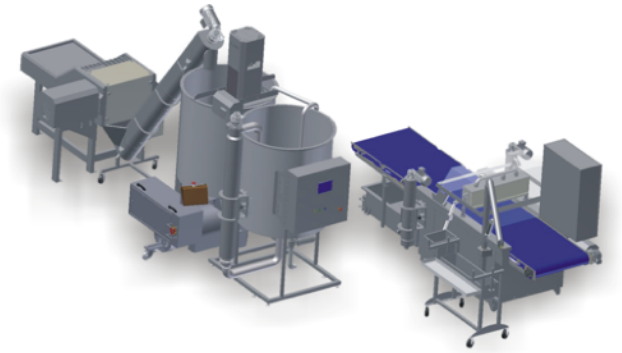

Easy Flaker, Easy-Inject system &
TR-850 Injector producing
“Fish in Fish” or “Meat in Meat”

High Quality Chilling Systems

Chilling & cooling to safe processing temperatures
The Easy Chilling System reduces risk of contamination

Easy chiller vertical swept surface heat exchanger,
offers the ultimate in the liquid process chilling.



Easy chilling tower



Glycol cooling unit with heat exchanger

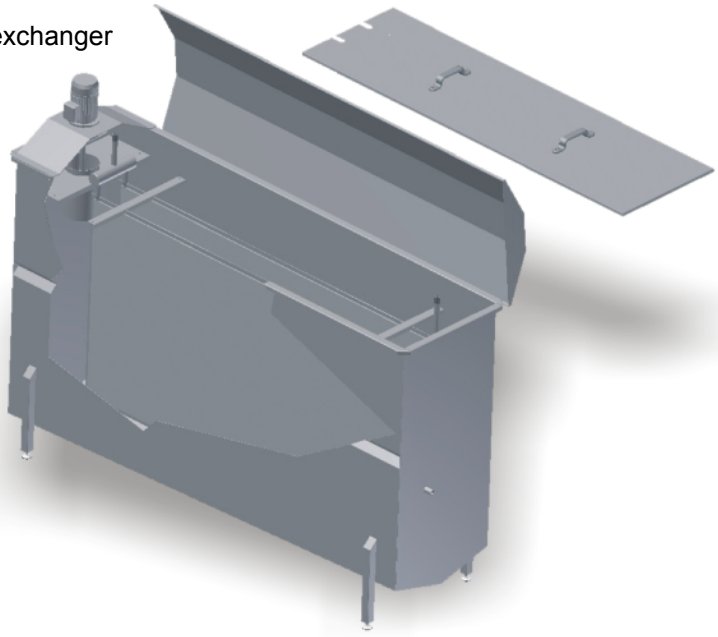

Easy-Brine Plate Chiller

Conceived for the batter/breaded food industry to control micro bacteriological counts: Batter chilled to and maintained at a specific temperature has proven to be a key factor in consistent batter and crumb pick up.

This equipment also has proven extremely effective in chilling and maintaining brine and meat suspensions at safe processing temperatures as well as effectively cooling cooked liquids and sauces to a process temperature.

The Easy chiller is designed to assure smooth passage of the most delicate products while sanitary blades scrape product from the super cold surface that is chilled by plant refrigeration - ammonia, freon or glycol. Under all conditions, our Easy chiller can meet your strictest process chilling requirements.

Advanced Cooling Systems

Chills fish, meat, protein & other food products while they are being processed

Chilling & cooling to safe processing temperature

1



Easy-Brine Plate Chiller

2

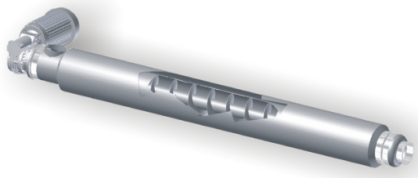

Easy chilling tower

3



Easy-Inject & Easy Chilling Tower vertical swept surface heat exchanger, offers the ultimate in the liquid chilling process.

4



Easy Cooler.
To chill fish fillets, meat & other food product that needs liquid chilling, while being processed.

1) Easy brine plate chiller
2) Easy chilling tower
3) Easy Inject system
4) Easy Cooler

Benefits of Easy Chilling:

- Chills fish, meat & batters while processing
- Chilling tower: Vertical or horizontal
- Material: Stainless steel
- User-friendly touch screen
- Internet connection
- Easy adjustable settings
- Many different sizes
- Energy efficient
- Reliable system
- Reduces risk of contamination
- Easy to clean & sanitize
- Built to customer specification

Easy Chiller & Cooling Systems

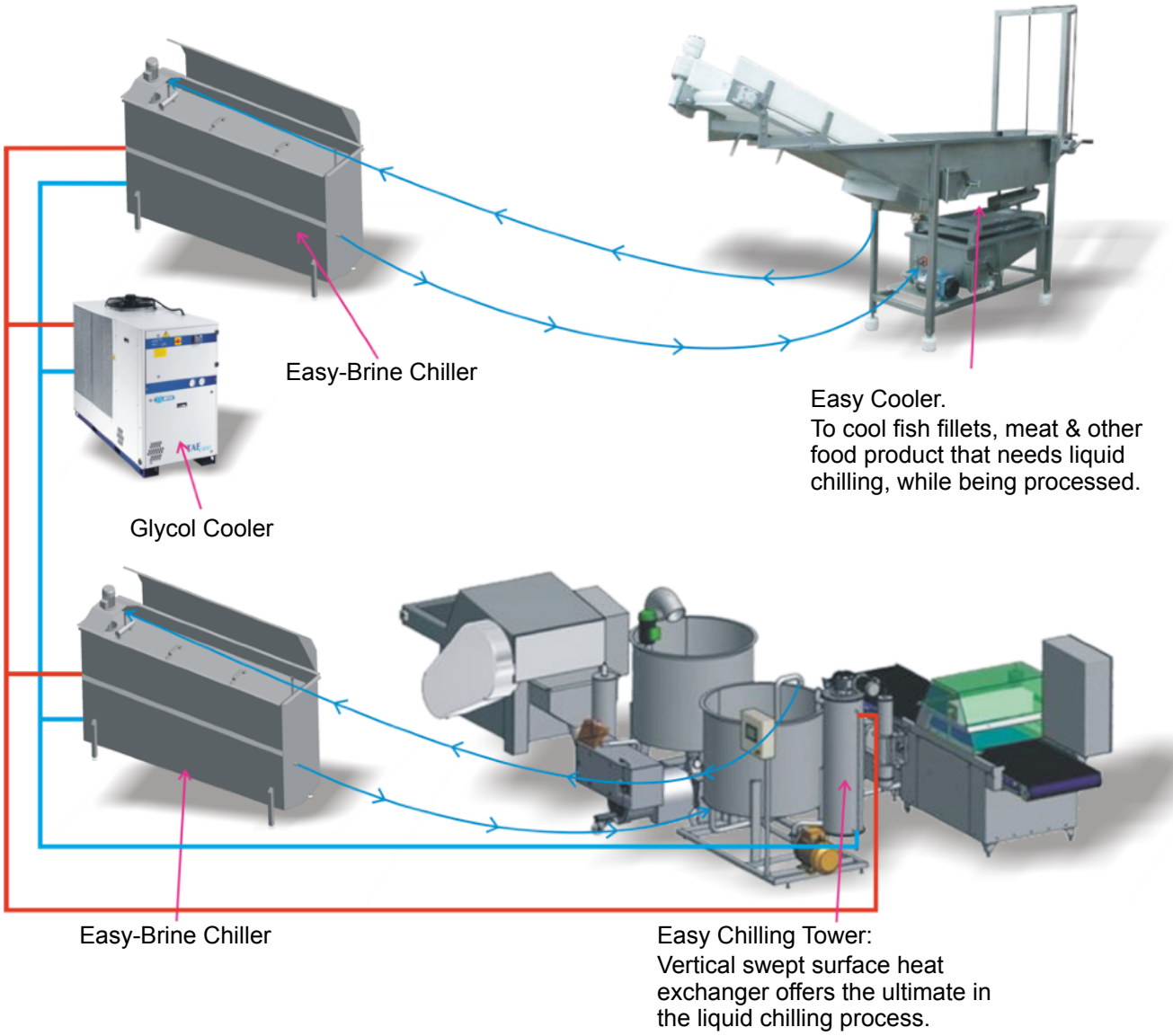

Available is a wide range of Easy Brine Mixing Systems



Optimize your investment with custom-made solutions.
Traust Know How, Ltd., has been a leader developing processing equipment for over 30 years. Our qualified team of engineers with years of experience, design and develop all our fish processing plants/equipment to suit the need of the fish processing industry around the world.

www.traust.is traust@traust.is Office phone: +354-516-3000

TRAUST TECHNOLOGIES